

J&K CABINETRY

PRODUCT SPECIFICATIONS

2023

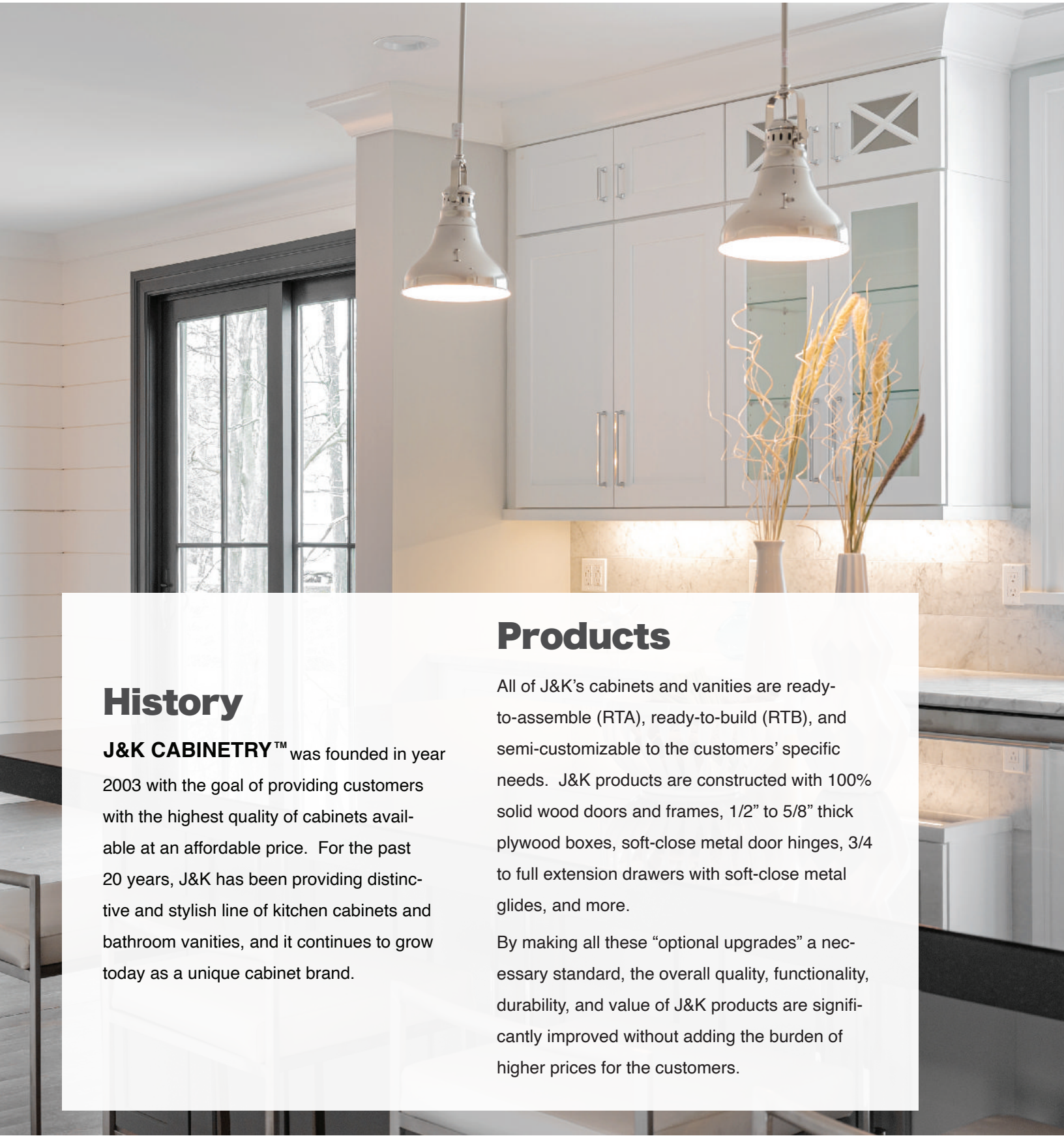

History

J&K CABINETRY™ was founded in year 2003 with the goal of providing customers with the highest quality of cabinets available at an affordable price. For the past 20 years, J&K has been providing distinctive and stylish line of kitchen cabinets and bathroom vanities, and it continues to grow today as a unique cabinet brand.

Products

All of J&K's cabinets and vanities are ready-to-assemble (RTA), ready-to-build (RTB), and semi-customizable to the customers' specific needs. J&K products are constructed with 100% solid wood doors and frames, 1/2" to 5/8" thick plywood boxes, soft-close metal door hinges, 3/4 to full extension drawers with soft-close metal glides, and more.

By making all these "optional upgrades" a necessary standard, the overall quality, functionality, durability, and value of J&K products are significantly improved without adding the burden of higher prices for the customers.



CONTENTS

01	Door Styles & Finishes
03	Environmental Commitment
04	Finest Furniture Finishes
05	Superior Construction
06	Standard Features
07	J&K Specification & Nomenclature
08	J&K Cabinet Dimensions
09	Warranty
11	Maintenance & Care
12	Base Cabinets
19	Wall Cabinets
31	Glass Shelf & Insert
32	Pantry & Oven Cabinets
35	Storage & Organization
38	Hoods & Specialty Cabinets
39	Bathroom Vanities
45	Dummy Doors, Drawers & Replacements
49	Panels & Fillers
53	Moldings
59	Valances & Decor Blocks
62	Onlays, Corbels & Posts

Door Styles & Finishes

CONTEMPORARY



S8
White



S5
Castle Grey



S1
Java Coffee

Notes: Constructed with ALL-WOOD reversed raised panel door for S8, S5, S1.

TRADITIONAL



A7
Crème Glazed



K10
Mocha Glazed



J5
Mahogany



M01
Chocolate Glazed

***Note:** The photography and color samples shown in this spec book have been reproduced as accurately as printing technologies permit and are for representation only. To ensure the highest satisfaction, we strongly recommend you view an actual product sample prior to ordering cabinetry.

***Note:** Natural wood characteristics such as gum pockets, streaks and pin knots may be visible, particularly with some of our light paints. These characteristics tend to be more pronounced on the backs of our drawers and doors.

***Note:** Availability for a particular product style and color may vary depending on locations. Please check with your local *J&K Cabinetry* authorized wholesaler for current availability before planning your projects.

TRANSITIONAL



B5 *(NEW)* *Coming Soon!*
Pure



B6 *(NEW)* *Coming Soon!*
Pebble



B7 *(NEW)*
Naval



B8 *(NEW)* *Coming Soon!*
Butterscotch

Notes: Constructed with ALL-WOOD reversed raised panel door for B5, B7.



E1
Dove



E2
Charcoal



E3 (NEW)
Sage

Notes: Constructed with plywood center panel for E1, E2, E3.



H9
Pearl Glazed



H8
Hazel



H3
Chestnut



K3
Greige



K8
Espresso

Environmental Commitment



J&K Cabinetry believes that a healthy environment is the backbone to the happy lives of our customers and our society. In addition to its continued effort to improve product qualities and values, J&K is committed to providing environmental-friendly and healthy products.

J&K products' hardwood-plywood materials are "EPA TSCA Title VI Compliant," also known as "CARB 2 Compliant" for formaldehyde. J&K also uses AkzoNobel, a leading global company in sustainable paints and coatings, for its cabinet finishes.

CARB 2 Compliant

AkzoNobel

NKBA NATIONAL KITCHEN+BATH ASSOCIATION

Finest Furniture Finishes

J&K's solid wood cabinet finishes are processed thorough the following excellent craftsmanship details:

1. The finest solid wood is sanded until smooth and vacuumed.
2. An equalizer stain is applied to balance the base color of the wood.
3. A toner is applied to establish color uniformity.
4. A deep penetrating stain is applied to reveal the hidden beauty of the natural grain.
5. All stained surfaces are hand-rubbed and wiped of excess stain and then slowly air-dried.
6. A wood sealer is applied, penetrating all exposed wood surfaces for uniform protection.

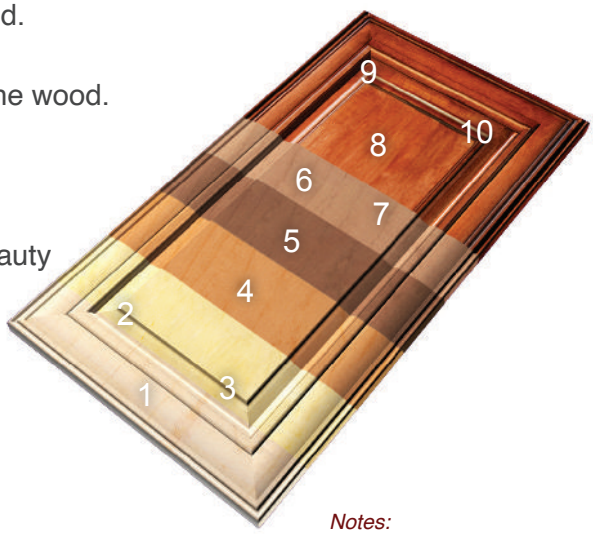

Notes:
NOT Actual Product;
Image For Reference Only.

7. All surfaces are hand-sanded, providing a smooth, consistent surface.
8. A glaze is applied by hand (if applicable).
9. A color consistency examination is performed with additional touch-ups, if needed.
10. A final protective top coat is applied, maximizing resistance to scuffing, moisture, fading and most household chemicals.

Natural Wood Characteristics:


Arce


Burl Grain

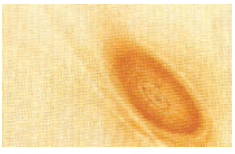
Open Knots


Bird's Eye


Mineral Streaks


Heartwood

Note: All solid wood may contain natural "imperfections," such as variations in color, grain, mineral streaks and knots.

Superior Construction

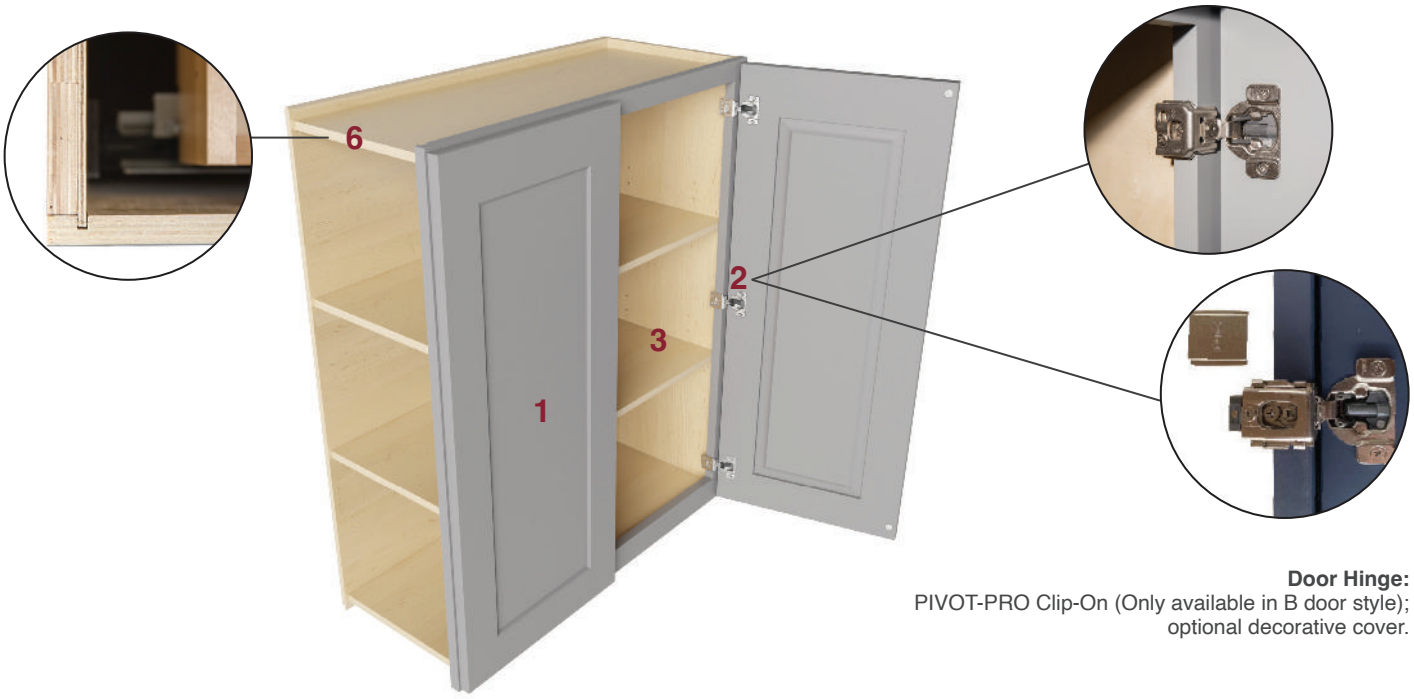

Door Hinge:
PIVOT-PRO Clip-On (Only available in B door style); optional decorative cover.

Wall Cabinet with two doors (Sample only).



Base Cabinet with one drawer and one door in Castle Grey (S5).

Standard Features

All J&K's cabinets and vanities are superiorly constructed with 100% solid wood and proudly come with the following **STANDARD** features:

1. **DOOR PANEL** – 3/4" thick solid wood, full overlay door.

2. **DOOR HINGE** – 6-way adjustable, soft-close metal and hidden Euro-style.
   – PIVOT-PRO Clip-On (ONLY available in B door style): optional decorative cover.

3. **ADJUSTABLE SHELF** – 3/4" thick cabinet-grade plywood, clear coat finish on all sides and edges; with metal shelf rests.

4. **DRAWERS** – 5/8" thick solid wood on all sides, dovetail construction.

5. **DRAWER GLIDE** – 3/4 to Full extension pull-out, soft-close metal and concealed under-mount.

6. **PLYWOOD BOX** – 1/2" to 5/8" thick cabinet-grade plywood, clear coat finish on interior sides; matching color finish on exterior sides.

7. **METAL BRACKET** – Corner bracket reinforcements in base cabinets for maximum stability.

8. **DOOR BUMPER** – Promotes quiet-closing and reduces slamming for maximum durability.

Tilt-out Trays have been another upgrade and STANDARD feature in all of J&K's Kitchen Sink Base and Vanity Sink Cabinets.





NOTE:

As we continue to improve our product qualities and designs, the actual functionality of *Door Hinges* and *Drawer Glides* may vary slightly between existing and newest product styles and finishes. Please check with your local J&K Cabinetry authorized wholesaler for the most current updates.

J&K Specification & Nomenclature

All of J&K's cabinet dimensions come in 3" increments ranging from 9" to 42" in width for regular Base Cabinets and Wall Cabinets. Height and depth usually come in standard (and unlisted) sizes. Other non-standard or special dimensions are either fully listed or unspecified.

Kitchen Base Cabinets

with standard unlisted height and depth:

B12
=
B,12, 34-1/2, 24
=
Letter Code, Width, Height, Depth

Kitchen Wall Cabinets

with standard unlisted depth:

W3036
=
W, 30, 36, 12
=
Letter Code, Width, Height, Depth

Bathroom Vanity Cabinets

with standard unlisted height:

FA2421
=
FA, 24, 33, 21
=
Letter Code, Width, Height, Depth

J&K Cabinet Dimensions

KITCHEN CABINET DIMENSION :

1	Standard 34-1/2”
2	6” on K10, M01, A7, K8, K3
	7” on J5, S1, S5, S8, H3, H8, H9, E1, E2, B5, B7
3	23” on K10, M01, A7, K8, K3
	22” on J5, S1, S5, S8, H3, H8, H9, B5, B7
	21-7/8” on E1, E2
4	Standard 4-1/2”
5	Standard 2-1/2”
6	Standard 24” (To the face frame)
7	Standard 3/4”
8	11-3/8” on K10, M01, A7, K8, K3
	10-7/8” on J5, S1, S5, S8, H3, H8, H9, B5, B7
	10-3/4” on E1, E2
9	11-3/8” on K10, M01, A7, K8, K3
	10-7/8” on J5, S1, S5, S8, H3, H8, H9, B5, B7
	10-3/4” on E1, E2

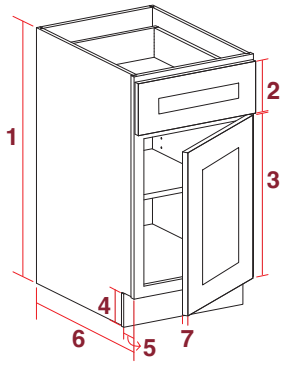

B18

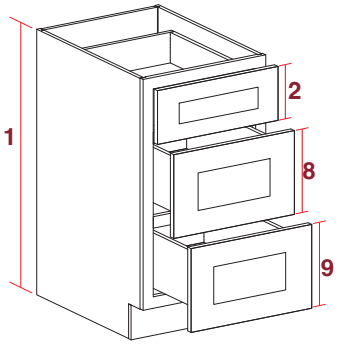

DB21-3

VANITY CABINET DIMENSION :

1	Standard 33”
2	6” on K10, M01, A7, K8, K3
	7” on J5, S1, S5, S8, H3, H8, H9, E1, E2, B5, B7
3	21-5/8” on K10, M01, A7, K8, K3
	20-1/2” on J5, S1, S5, S8, H3, H8, H9, B5, B7
	20-1/2” on E1, E2
4	Standard 4-1/2”
5	Standard 2-1/2”
6	Standard 21” (To the face frame)
7	Standard 3/4”
8	10-5/8” on K10, M01, A7, K8, K3
	10-3/8” on J5, S1, S5, S8, H3, H8, H9, B5, B7
	10” on E1, E2
9	10-5/8” on K10, M01, A7, K8, K3
	10-3/8” on J5, S1, S5, S8, H3, H8, H9, B5, B7
	10” on E1, E2

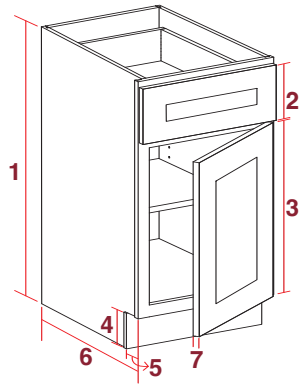

SVA09B

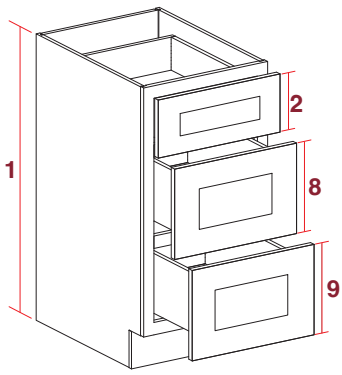

SVA21D

WALL CABINET DIMENSION :

A	36”
B	35-1/2” (Door dim.)
	35-3/16” on E1, E2
C	18”
D	17-3/4” (Door dim.)
	17-11/16” on E1, E2

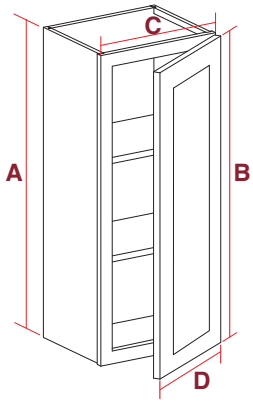

W1836

Notes:
Vanity FA#### Cabinets, 1/8” – 1/2” deviation expected.
Door opening direction: Flip the Wall Cabinet to change the hinge side.
Unscrew the Base Cabinet door to switch hinge side.

J&K FIVE YEAR LIMITED WARRANTY

J&K CABINETRY ("J&K") extends the following limited warranty on all cabinets sold by J&K within the United States and Canada. This Limited Warranty is only applicable to Products sold to the original purchasing consumer on or after January 1, 2019. J&K warrants that all cabinets purchased from J&K will be free from all unnatural defects in material and workmanship in accordance with J&K quality standards sheet under normal residential use for 5 years from the date of the original purchase or as long as the original purchasing consumer owns the home in which such cabinets are installed, whichever is less. This warranty is non-transferable to subsequent owners of the home. Door hinges and all drawers glide system, including system hardware (lift system), however, are warranted for only 1 year under normal residential use from the date of the original purchase. PLEASE NOTE: this limited warranty is only applicable to products purchased directly from authorized retailers or distributors. Warranty claims for products purchased from online retailers, auction websites, any unauthorized third-party sellers may not be honored. We strongly recommend purchasing our products from authorized sellers to ensure the validity of the warranty.

THIS LIMITED WARRANTY IS SUBJECT TO ALL LIMITATIONS, EXCLUSIONS, DISCLAIMERS, AND PROCEDURES SET FORTH HEREIN.

The warranty does not cover defects caused by improper handling, storage, dirt, chemicals, abrasive or citrus cleaning products, installation, assembly or disassembly, transit or other intentional or negligent damage, product modifications, exposure to the extreme moisture, humidity or excessive heat or cold (temperature outside the range of 50-85°F and humidity outside the range of 30-55% are considered extreme), nor does it cover defects arising from normal wear and tear, misuse, neglect, accidents, alterations, improper use, exposure to improper loads, or failure to maintain properly. Any modification to the hardware structure or finish of the original consumer purchaser's cabinetry by anyone other than those specifically authorized by J&K to do so shall void this limited liability warranty. The product must be used exclusively for its intended purpose in order to be covered by this limited liability warranty. This limited liability warranty shall become void if the cabinets or any components or parts thereof are in any way modified, improperly installed or damaged prior to or during installation, or installed or used in other than normal residential applications.

Natural woods may vary in color, grain pattern, and characteristics and exhibit subtle changes as they age. Wood characteristics that naturally occur, such as variations in color, grain, mineral streaks and knots, are not considered defects. J&K will not be held responsible for these variations in your cabinetry. For example, painted doors, drawer fronts, and face frames may eventually have visible cracking around the joint area, and cabinet colors may darken or lighten over time. These conditions are considered a normal occurrence and are not included or covered by this limited liability warranty. A glazed finish by character is an uneven finish. Some edges and profiles will have heavier hang up than others and glazing may vary cabinet to cabinet, door to drawer and item to item. This may result in overall color variations but is not considered a defect. UV light, Sunlight, smoke, household cleaners, and other environmental conditions may also affect the color and integrity of the Product's finish or appearance over time. These variations are considered to be the nature of the material in relation to their environmental exposure and are not considered defects in material or workmanship and are not covered under this Limited Warranty.

Mitered door joints in particular are likely to react to conditions of their environment. Gaps that may develop in door joints due to conditions of their environment are not included or covered by this limited liability warranty. This limited liability warranty does not cover or apply to hairline cracks of cabinetry; hairline cracks are unavoidable in wood cabinets given the nature of the material. Every species and grade of solid wood behaves in such a way as to eventually result in hairline cracks.

Wood is wood and expansion and contraction still happen year after year as it compensates and adjusts to ever changing atmospheric humidity and temperature conditions. Observing shrink, expansion on center panels of doors is very common. It will return to its natural position within couple months once it has adjusted to seasonal changes. For the same reason, all door warpage greater than ¼" will be warranted. Please remove all doors and check them on a flat surface for the above stated warpage before requesting replacement.

Warranty Performance. J&K periodically updates and makes changes to its product line and specifications. If a warranty claim is filed during the warranty period against obsolete or changed product and repair is not possible, J&K will, at its sole option, repair or replace the part under warranty with a new part of the same style or with a similar style currently offered and does not include or cover any other costs, including but not limited to any costs of service, labor, shipment, transportation, removal or installation related to the repair or replacement. J&K is not responsible for a replacement product that may not match the installed product exactly. If a manufacturing defect occurs within this limited liability warranty's terms and conditions and J&K determines to replace the defective cabinet or component or part thereof, J&K will ship the replacement cabinet or component or part thereof to the original consumer purchaser via ground shipper or freight carrier, at J&K's sole discretion.

DISCLAIMER OF OTHER WARRANTIES:

THIS WRITING IS THE COMPLETE AND EXCLUSIVE REMEDY FOR ANY ORIGINAL CONSUMER PURCHASER. FOR BREACH OF WARRANTY. THE STATEMENT OF THE EXPRESS WARRANTIES PROVIDED HEREIN IS IN LIEU OF ANY AND ALL OTHER EXPRESS AND/OR STATUTORY WARRANTIES, TO THE EXTENT PROVIDED BY LAW. IN NO EVENT SHALL J&K BE LIABLE FOR INCIDENTAL OR CONSEQUENTIAL DAMAGES TO ANY ORIGINAL CONSUMER PURCHASER OR A THIRD PARTY, INCLUDING BUT NOT LIMITED TO DAMAGES ARISING FROM PERSONAL INJURY, LOST PROFITS, LOSS OF BUSINESS OPPORTUNITIES, LOSS OF PROPERTY, ECONOMIC LOSS, STATUTORY OR EXEMPLARY DAMAGES, WHETHER FROM NEGLIGENCE, WARRANTY, STRICT LIABILITY OR OTHERWISE. ANY AND ALL IMPLIED WARRANTIES OF MERCHANTABILITY, FITNESS FOR A PARTICULAR PURPOSE, COURSE OF DEALING AND USAGE OF TRADE, AND ANY AND ALL OTHER WARRANTIES, EXPRESS OR IMPLIED, ARE EXCLUDED AND DISCLAIMED, EXCEPTING ONLY THOSE EXPRESS WARRANTIES SPECIFICALLY SET FORTH IN THIS LIMITED LIABILITY WARRANTY. IN NO EVENT SHALL J&K BE LIABLE FOR ANY INDIRECT DAMAGES RESULTING FROM INSTALLATION, USE OR FAILURE OF ITS PRODUCTS. THIS LIMITED LIABILITY WARRANTY IS J&K'S SOLE WARRANTY, AND NO DEALER, DISTRIBUTOR OR AGENT POSSESSES ANY AUTHORITY WHATSOEVER TO MODIFY OR ENLARGE THIS WARRANTY IN ANYWAY. SOME STATES DO NOT ALLOW LIMITATIONS ON HOW LONG AN IMPLIED WARRANTY LASTS, SO THE ABOVE LIMITATION MAY NOT APPLY TO YOU.

CLAIMS:

To file a warranty claim, first contact your locally authorized J&K builder, dealer or distributor who installed and sold the J&K product. They will obtain the information necessary to make a claim decision and forward such information in writing to J&K. A dated sales receipt as proof of purchase is also required to obtain benefits from these warranties. At its discretion, J&K may require an inspection of the allegedly defective product before repairing or replacing. If you have difficulty obtaining assistance, please email all documents to contact@jandkcabinetry.com, with an explanation of the defect. Please do not send the allegedly defective cabinet or component or part thereof to J&K, unless and until expressly requested to do so by our claims department. Pictures of cabinets or components or parts thereof may be requested by J&K. Making a fraudulent claim may be a crime, and violators may be prosecuted. J&K reserves the right to make all final decisions regarding warranty claims.

This limited liability warranty and its enforcement, and any and all claims or disputes arising out of, relating to or in connection with this limited liability warranty or the making, performance or interpretation of this limited liability warranty, shall be (1) governed by and construed exclusively in accordance with the laws of the State of New York, without regard to the conflicts of law or choice of law principles of the State of New York or any other jurisdiction (including but not limited to U.S. federal law) that would require the application of the law of any other jurisdiction, and (2) brought only in the United States District Court for the District of Southern District of New York or the New York Supreme Court, Nassau County.



Maintenance & Care

General Information:

1. As a general rule, keep all cabinet surfaces dry at all times.
2. Cabinet surfaces shall be dried immediately with a soft, lint-free cotton cloth.
3. Avoid using a dish cloth or sponge. Avoid ammonia-based cleaners and soaps with dye. Harsh detergent residues may harm cabinet finishes.
4. As with all wood products, quick temperature changes and excessive moisture can be harmful to the cabinet finish and overall cabinet stability.

Basic Cleaning:

1. To remove dust after installation and for initial cleaning, use a soft, lint-free cotton cloth to wipe down all exterior and interior surfaces.
2. For regular basic cleaning, use a soft, lint-free cotton cloth dampened with a mild detergent or soap and warm water. For best results, use a blotting action rather than a wiping motion, when cleaning.
3. Wipe up food spills and water spots immediately with a lint-free cotton cloth, so moisture is not absorbed into the cabinet surfaces.

Cleaning of Glass Door Inserts:

1. Use a household glass cleaner with a soft, clean cloth.
2. Apply the glass cleaner directly to the cleaning cloth rather than on the glass or mirror.
3. Avoid excess glass cleaner running into the cabinet joints.
4. Ammonia should never be used in full strength.

Basic Care & Things to Avoid:

1. When in doubt of a cleaner's suitability, DO NOT USE.
2. Never use scouring pads, steel wool, wire brushes or powdered cleansers.
3. Never leave a cloth moistened with cleaner on any cabinet surface for any length of time.
4. Check the areas around the sink and dishwasher to make sure that water and detergents do not dry on the cabinet surfaces.
5. Avoid draping wet or damp dish towels over doors of the base cabinets.
6. Do not attach towel racks to the interior of cabinet doors.
7. Avoid placing small kitchen appliances where the heat or steam is directed onto cabinet surfaces.
8. Do not leave printed materials (newspapers, magazines, etc.) on the cabinet surfaces, as the printing can bleed into the cabinet finish.

BASE CABINETS



Base Cabinet With 1 Drawer & 1 Door

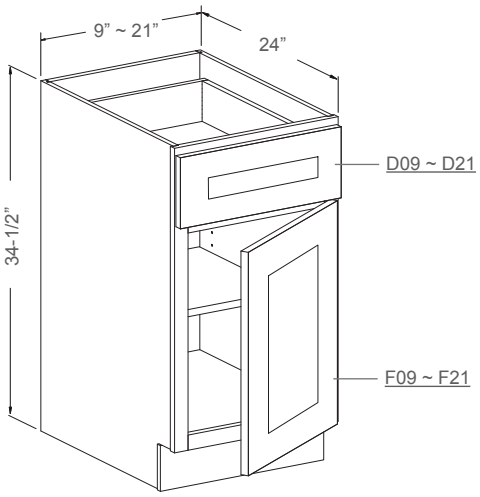

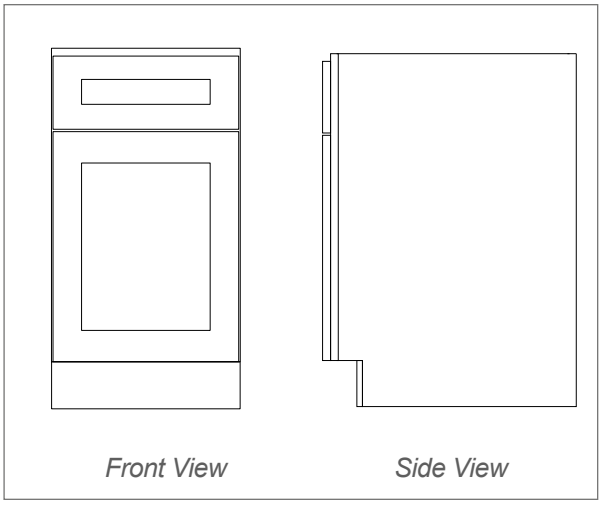

Features

- 1 Drawer
- 1 Door
- 1 Adjustable Shelf

Notes:
Underlined Item Codes Indicate Replacement Parts.

Item Code	Dimensions	Weight
B09	9W x 34-1/2H x 24D	42 LB
B12	12W x 34-1/2H x 24D	45 LB
B15	15W x 34-1/2H x 24D	50 LB
B18	18W x 34-1/2H x 24D	53 LB
B21	21W x 34-1/2H x 24D	57 LB

Base Cabinet With 1 Drawer & 2 Doors

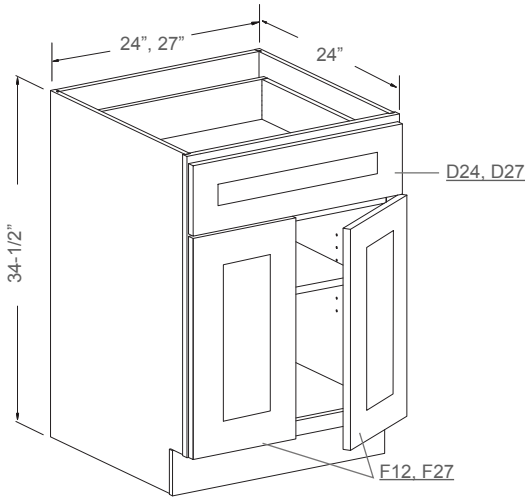

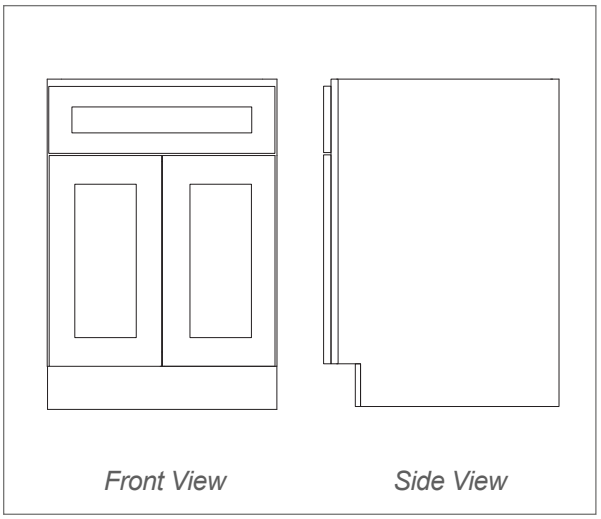

Features

- 1 Drawer
- 2 Doors
- 1 Adjustable Shelf

Notes:
Underlined Item Codes Indicate Replacement Parts.

Item Code	Dimensions	Weight
B24	24W x 34-1/2H x 24D	63 LB
B27	27W x 34-1/2H x 24D	68 LB

PLEASE CALL FIRST Availability for a particular product style and color may vary depending on locations.
Please check with your local *J&K Cabinetry* authorized wholesaler for current availability before planning your projects.

Base Cabinet With 2 Drawers & 2 Doors

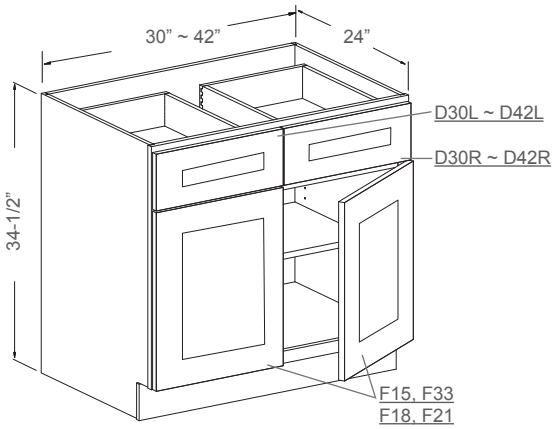

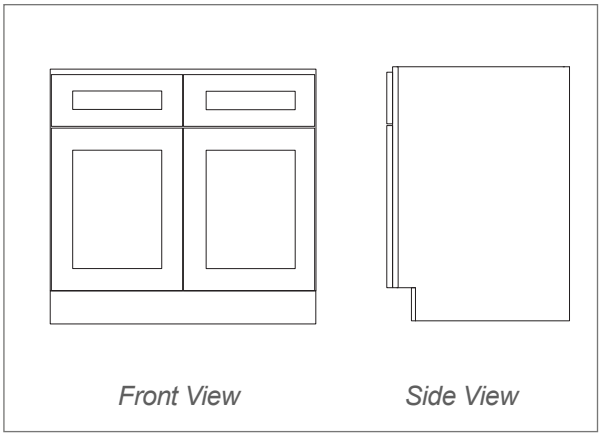

Features

- 2 Drawers
- 2 Doors
- 1 Adjustable Shelf

Notes:
Underlined Item Codes Indicate Replacement Parts.

Item Code	Dimensions	Weight
B30	30W x 34-1/2H x 24D	81 LB
B33	33W x 34-1/2H x 24D	85 LB
B36	36W x 34-1/2H x 24D	89 LB
B42	42W x 34-1/2H x 24D	94 LB

Drawer Base With 3 Drawers

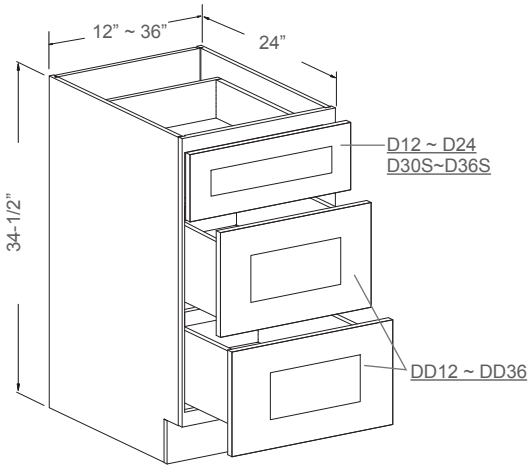

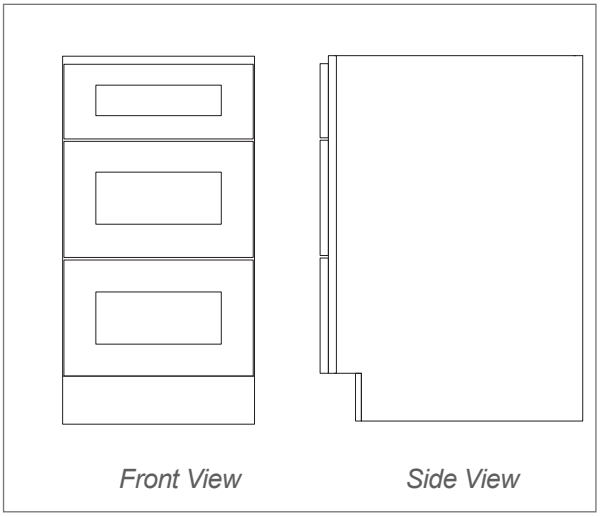

Features

- 1 Small Drawer
- 2 Large Drawers

Notes:
Underlined Item Codes Indicate Replacement Parts.

Item Code	Dimensions	Weight
DB12-3	12W x 34-1/2H x 24D	68 LB
DB15-3	15W x 34-1/2H x 24D	76 LB
DB18-3	18W x 34-1/2H x 24D	81 LB
DB21-3	21W x 34-1/2H x 24D	86 LB
DB24-3	24W x 34-1/2H x 24D	93 LB
DB30-3	30W x 34-1/2H x 24D	103 LB
DB36-3	36W x 34-1/2H x 24D	111 LB

PLEASE CALL FIRST All specifications are subject to change without notice. All images are for reference only. To ensure the highest satisfaction, we strongly recommend you view an actual sample for product style and construction.

Drawer Base With 2 Drawers

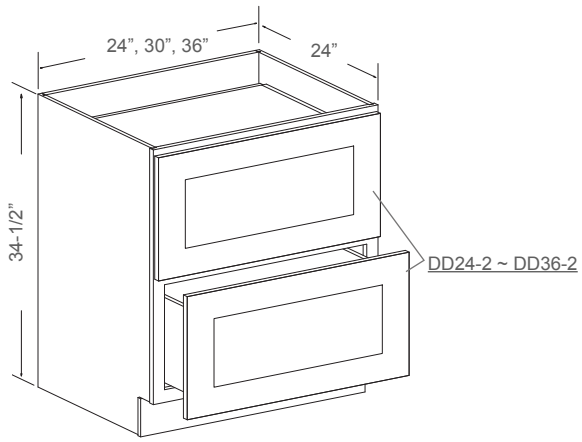

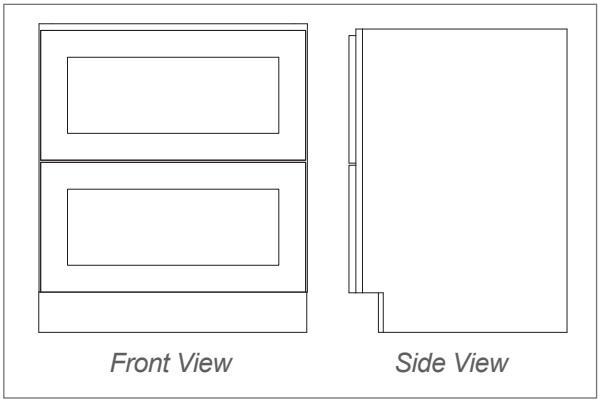

Features

- 2 Large Drawers

Notes: Underlined Item Codes Indicate Replacement Parts.

	Item Code	Dimensions	Weight
*	DB24-2	24W x 34-1/2H x 24D	83 LB
*	DB30-2	30W x 34-1/2H x 24D	93 LB
*	DB36-2	36W x 34-1/2H x 24D	104 LB

Base Diagonal Corner

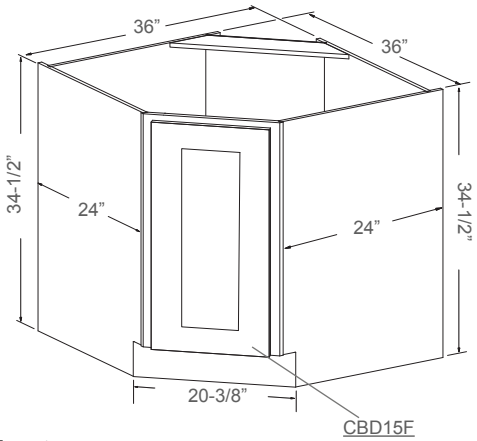

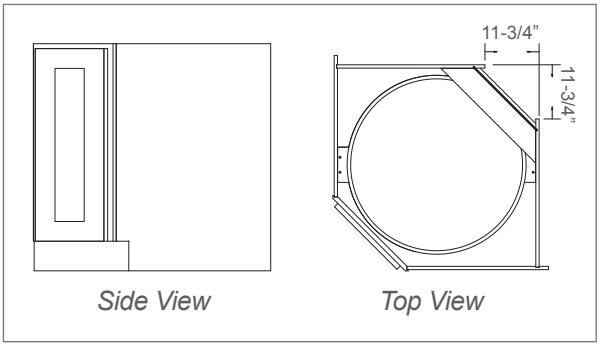

Features

- 1 Full Door:
  14-7/8”W x 29-1/4”H
- 2 Wooden Round Susans

Notes: Underlined Item Codes Indicate Replacement Parts.

Item Code	Dimensions	Weight
CBD36	36W x 34-1/2H x 24D	81 LB

Lazy Susan

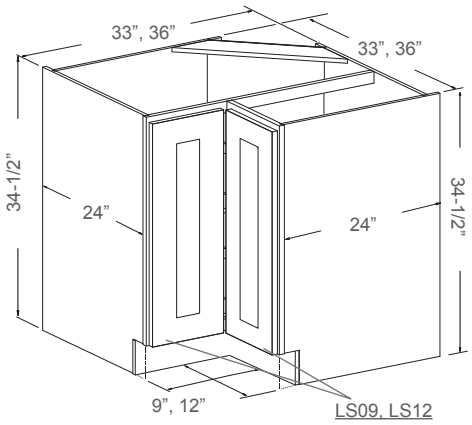

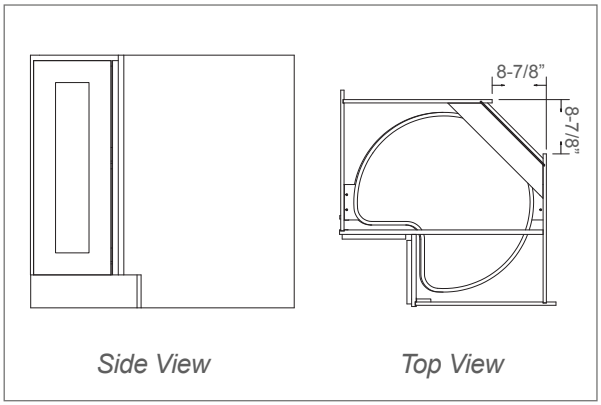

Features

- 1 Bi-folding Door:
  7-1/2”W, 10-1/2”W x 29-1/4”H
- 2 Wooden Kidney-Shaped Susans

Notes: Underlined Item Codes Indicate Replacement Parts.

	Item Code	Dimensions	Weight
*	LS3309	33W x 34-1/2H x 24D	77 LB
	LS3612	36W x 34-1/2H x 24D	81 LB

PLEASE CALL FIRST Availability for a particular product style and color may vary depending on locations.
Please check with your local *J&K Cabinetry* authorized wholesaler for current availability before planning your projects.

Base Diagonal Sink

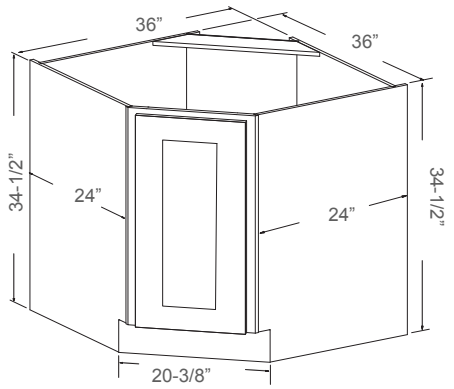

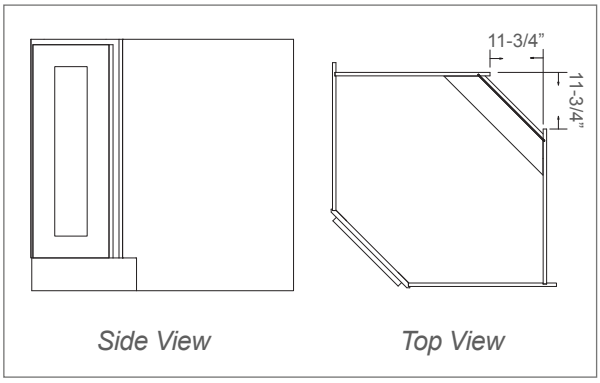

Features

- 1 Full Door: 14-3/4"W x 29-1/4"H
- No Shelf

Notes: Back Panel NOT Open

Item Code	Dimensions	Weight
CSB36	36W x 34-1/2H x 24D	62 LB

Base Blind Corner (L/R)

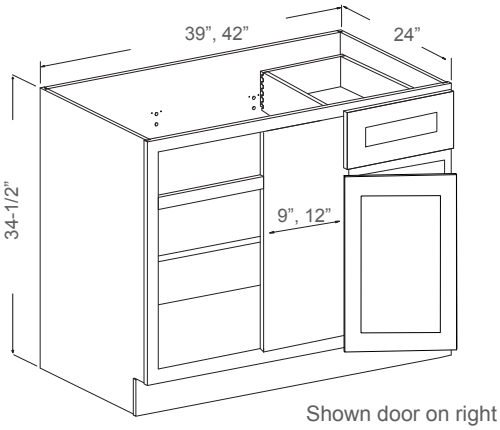

Shown door on right

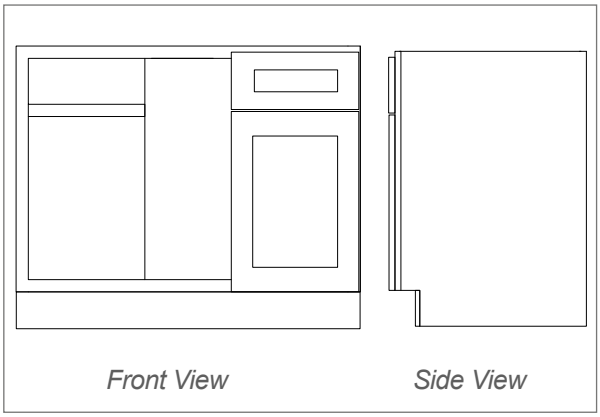

Features

- 1 Drawer on Left or Right
- 1 Door on Left or Right
- 1 Adjustable Shelf

Notes: Minimum 3" Pull From The Wall When Install

Item Code	Dimensions	Weight
BBC39L/R *	39W x 34-1/2H x 24D	72 LB
BBC42L/R	42W x 34-1/2H x 24D	78 LB

Notes: Door Width 15"W In BBC39L/R; 18"W In BBC42L/R.

Sink Base With 2 Door

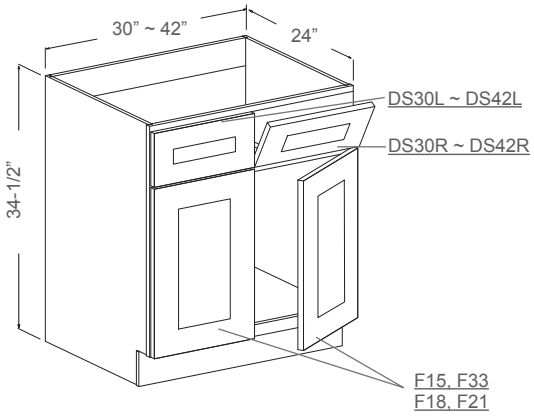

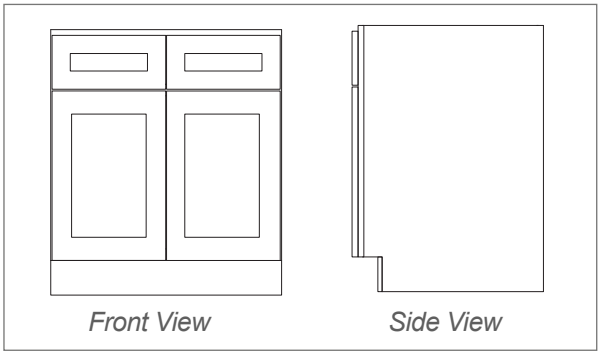

Features

- 2 Tilt-Out Drawers With Trays
- 2 Doors
- No Shelf

Notes: Back Panel Open

Notes: Underlined Item Codes Indicate Replacement Parts.

Item Code	Dimensions	Weight
SB30	30W x 34-1/2H x 24D	49 LB
SB33	33W x 34-1/2H x 24D	50 LB
SB36	36W x 34-1/2H x 24D	54 LB
SB42	42W x 34-1/2H x 24D	59 LB

PLEASE CALL FIRST All specifications are subject to change without notice. All images are for reference only. To ensure the highest satisfaction, we strongly recommend you view an actual sample for product style and construction.

BASE CABINETS

Spice Pull-Out Base Cabinet

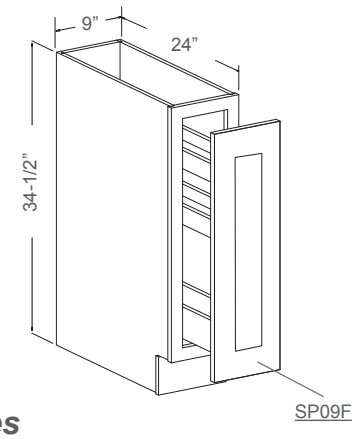

Features

- 1 Door: 8-3/4”W x 29-1/4”H
- 3 Fixed Pull-Out Shelves

Notes: Under-Mount Glide

Notes: Underlined Item Codes Indicate Replacement Parts.

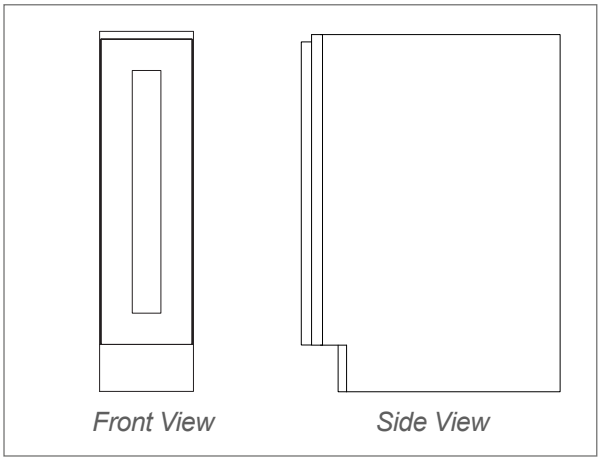

Item Code	Dimensions	Weight
SP09	9W x 34-1/2H x 24D	42 LB

Spice Drawer Base Cabinet

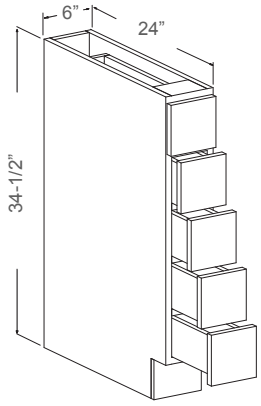

Features

- 5 Square Drawers: 5-3/4”W x 5-1/2”H (Each)

Notes: No Glides

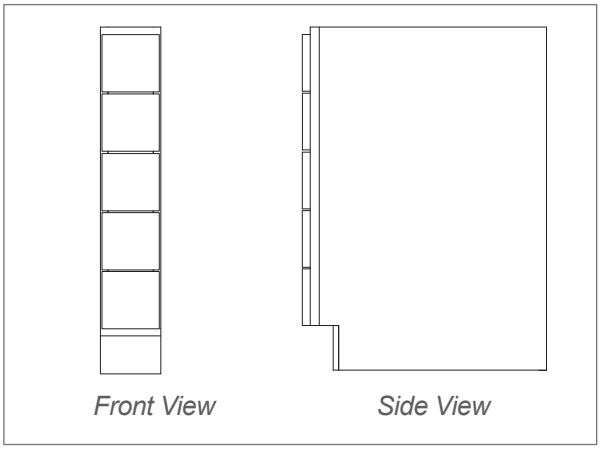

Item Code	Dimensions	Weight
BWRC6	6W x 34-1/2H x 24D	56 LB

Waste Bin Base Cabinet

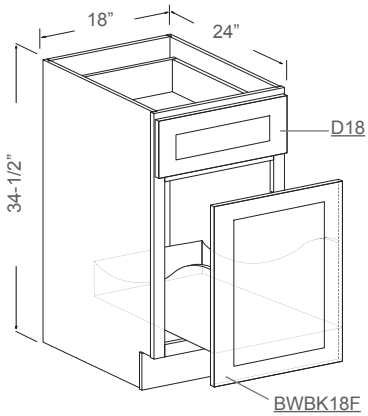

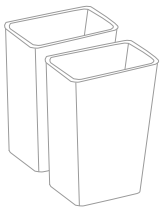

Features

- 1 Drawer
- 1 Door
- 2 Large Bin Cut-Outs

Notes: Plastic Waste Bins NOT Included

Notes: Underlined Item Codes Indicate Replacement Parts.

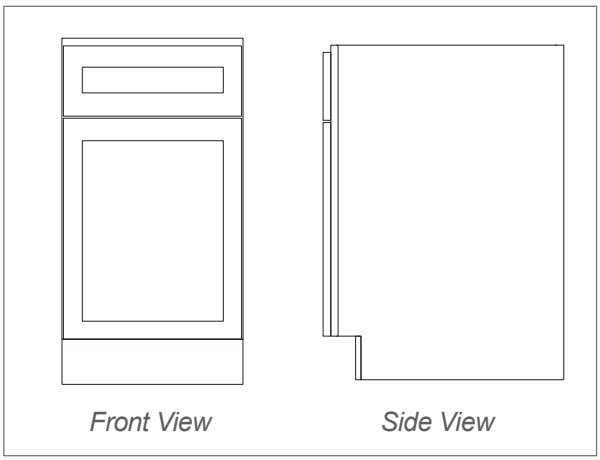

Item Code	Dimensions	Weight
BWBK18-2	18W x 34-1/2H x 24D	61 LB

PLEASE CALL FIRST Availability for a particular product style and color may vary depending on locations.
Please check with your local *J&K Cabinetry* authorized wholesaler for current availability before planning your projects.

Base End Corner

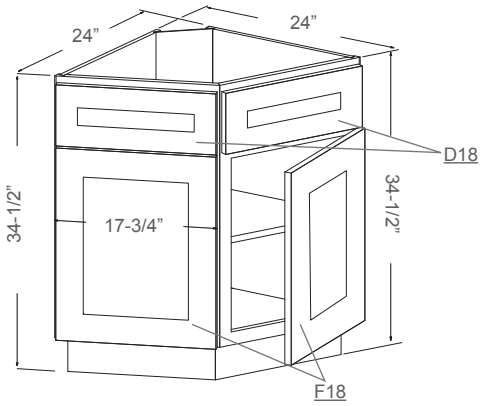

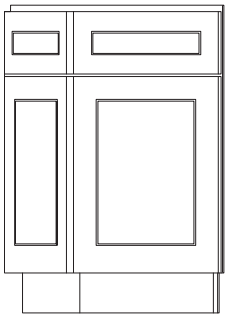

Side View

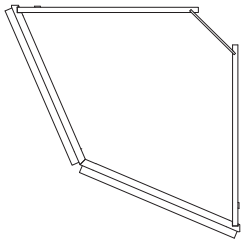

Top View

Features

- 2 Dummy Drawers
- 2 Doors
- 1 Adjustable Shelf

Notes:
Underlined Item Codes Indicate Replacement Parts.

Item Code	Dimensions	Weight
BEC24	24W x 34-1/2H x 24D	48 LB

Base End Shelf (L/R)

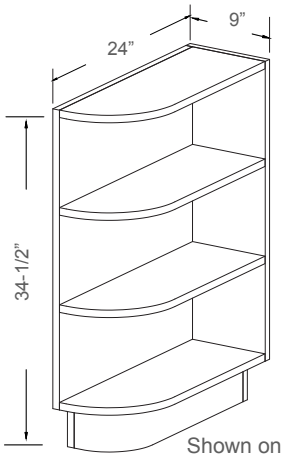

Shown on right

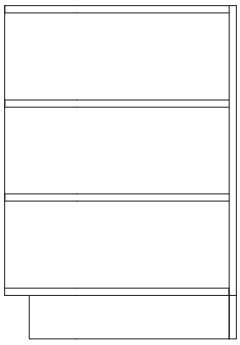

Front View

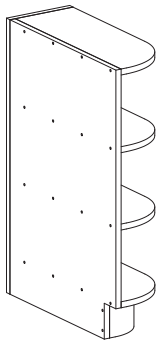

Back View

Features

- 3 Fixed Shelves
- Matching Color Finish

Item Code	Dimensions	Weight
BES09L/R	9W x 34-1/2H x 24D	34 LB

PLEASE CALL FIRST All specifications are subject to change without notice. All images are for reference only. To ensure the highest satisfaction, we strongly recommend you view an actual sample for product style and construction.

WALL CABINETS



Wall Cabinet - 12”H & 15”H

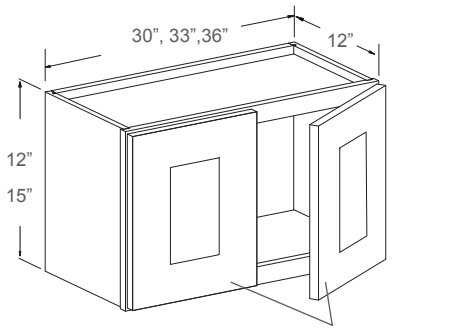

W3012F ~ W3615F

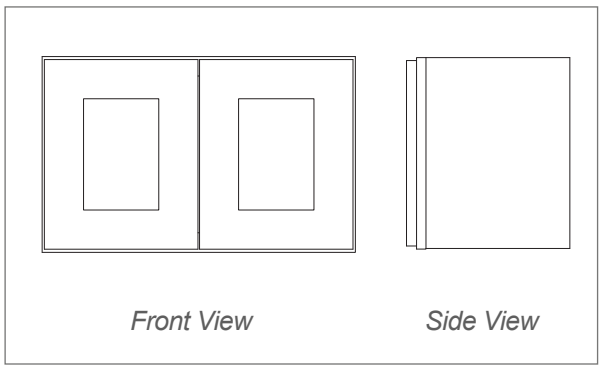

Features

- 2 Doors
- No Shelf

Notes:
Underlined Item Codes Indicate Replacement Parts.

	Item Code	Dimensions	Weight
	W3012	30W x 12H x 12D	20 LB
*	W3312	33W x 12H x 12D	22 LB
	W3612	36W x 12H x 12D	23 LB
	W3015	30W x 15H x 12D	22 LB
*	W3315	33W x 15H x 12D	25 LB
	W3615	36W x 15H x 12D	27 LB

Wall Cabinet - 18”H & 21”H

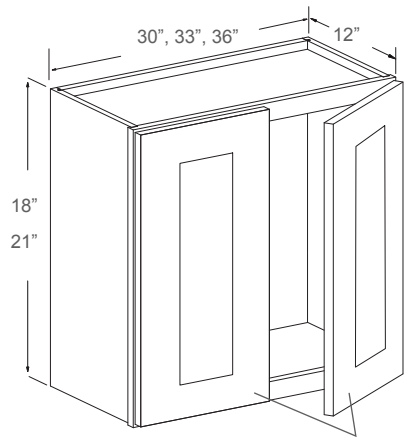

W3018F ~ W3621F

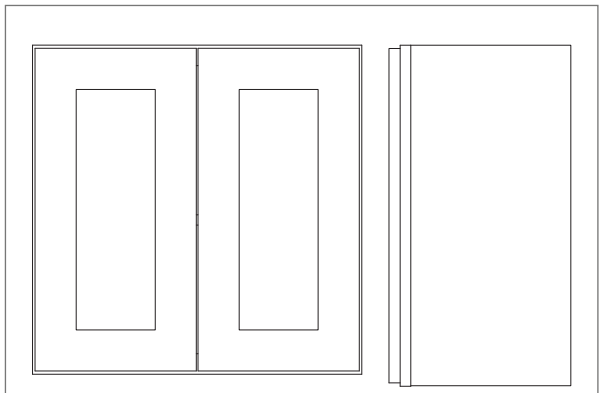

Features

- 2 Doors
- No Shelf

Notes:
Underlined Item Codes Indicate Replacement Parts.

	Item Code	Dimensions	Weight
	W3018	30W x 18H x 12D	26 LB
*	W3318	33W x 18H x 12D	28 LB
	W3618	36W x 18H x 12D	30 LB
	W3021	30W x 21H x 12D	29 LB
*	W3321	33W x 21H x 12D	31 LB
	W3621	36W x 21H x 12D	36 LB

PLEASE CALL FIRST All specifications are subject to change without notice. All images are for reference only. To ensure the highest satisfaction, we strongly recommend you view an actual sample for product style and construction.

Wall Cabinet - 24”H & 27”H

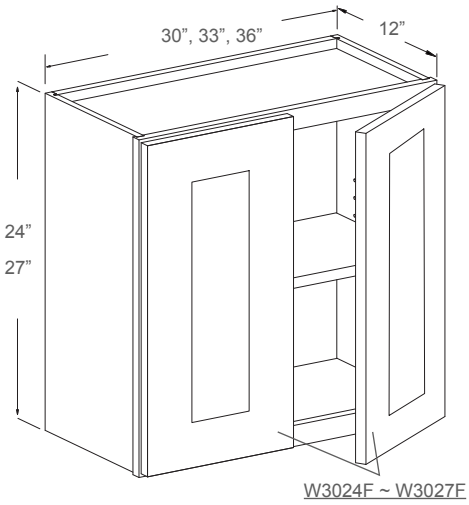

Features

- 2 Doors
- 1 Adjustable Shelf

Notes:
Underlined Item Codes Indicate Replacement Parts.

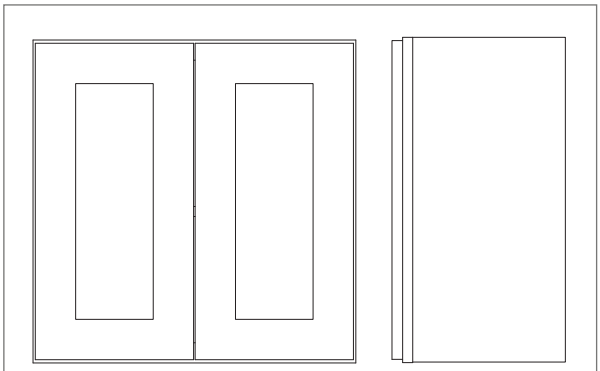

	Item Code	Dimensions	Weight
	W3024	30W x 24H x 12D	36 LB
*	W3324	33W x 24H x 12D	40 LB
	W3624	36W x 24H x 12D	41 LB

Wall Cabinet - 30”H & 36”H

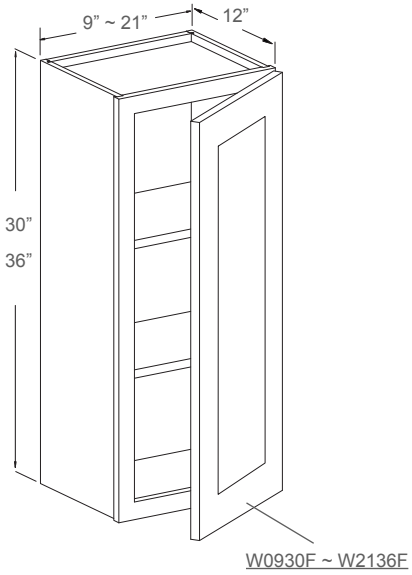

Features

- 1 Door
- 2 Adjustable Shelves

Notes:
Underlined Item Codes Indicate Replacement Parts.

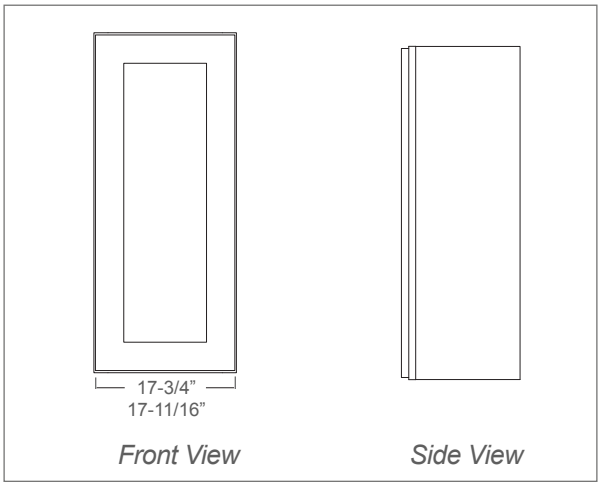

Item Code	Dimensions	Weight
W0930	9W x 30H x 12D	20 LB
W1230	12W x 30H x 12D	23 LB
W1530	15W x 30H x 12D	27 LB
W1830	18W x 30H x 12D	30 LB
W2130	21W x 30H x 12D	32 LB
W0936	9W x 36H x 12D	23 LB
W1236	12W x 36H x 12D	27 LB
W1536	15W x 36H x 12D	29 LB
W1836	18W x 36H x 12D	34 LB
W2136	21W x 36H x 12D	38 LB

PLEASE CALL FIRST Availability for a particular product style and color may vary depending on locations.
Please check with your local *J&K Cabinetry* authorized wholesaler for current availability before planning your projects.

Wall Cabinet - 30”H & 36”H

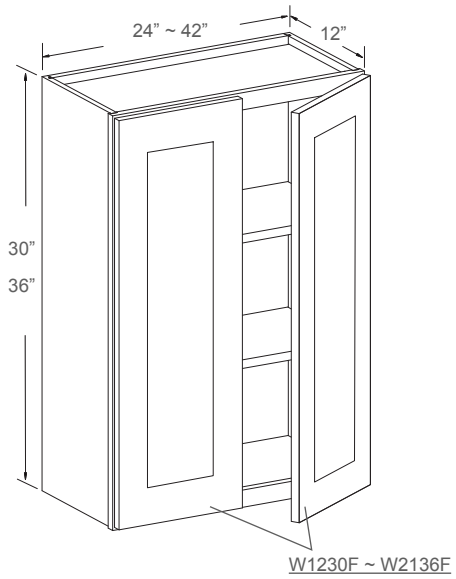

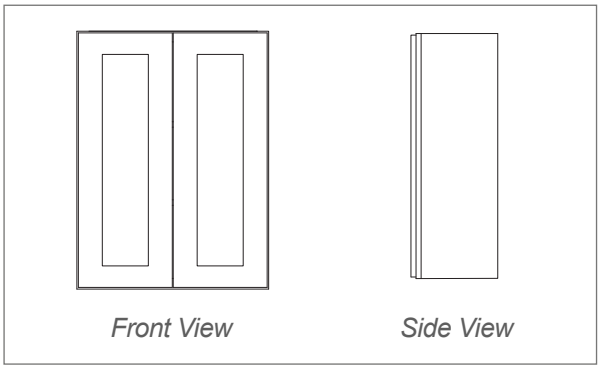

	Item Code	Dimensions	Weight
	W2430	24W x 30H x 12D	38 LB
	W2730	27W x 30H x 12D	42 LB
	W3030	30W x 30H x 12D	46 LB
	W3330	33W x 30H x 12D	50 LB
	W3630	36W x 30H x 12D	52 LB
*	W4230	42W x 30H x 12D	59 LB
	W2436	24W x 36H x 12D	43 LB
	W2736	27W x 36H x 12D	45 LB
	W3036	30W x 36H x 12D	51 LB
	W3336	33W x 36H x 12D	55 LB
	W3636	36W x 36H x 12D	59 LB
*	W4236	42W x 36H x 12D	66 LB

Features

- 2 Doors
- 2 Adjustable Shelves

Notes:
Underlined Item Codes Indicate Replacement Parts.

Wall Cabinet - 42”H

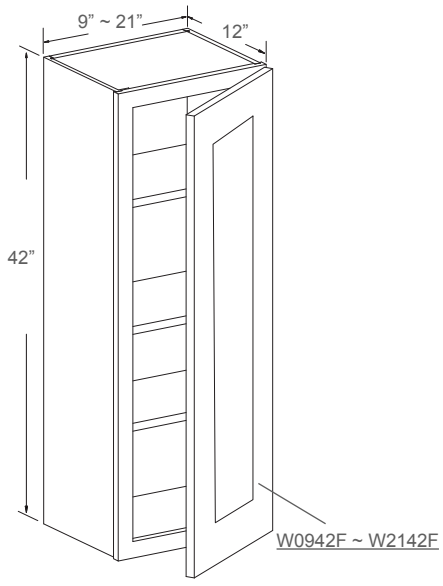

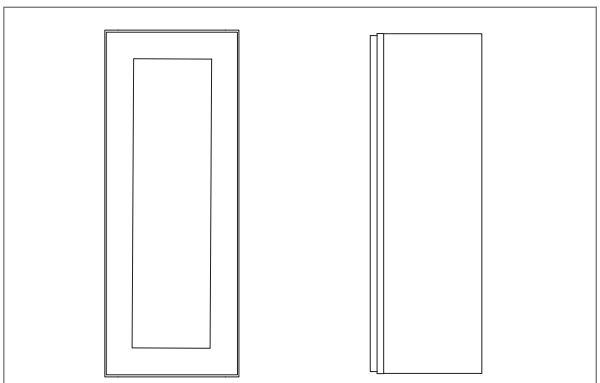

Item Code	Dimensions	Weight
W0942	9W x 42H x 12D	27 LB
W1242	12W x 42H x 12D	31 LB
W1542	15W x 42H x 12D	34 LB
W1842	18W x 42H x 12D	40 LB
W2142	21W x 42H x 12D	43 LB

Features

- 1 Door
- 3 Adjustable Shelves

Notes:
Underlined Item Codes Indicate Replacement Parts.

PLEASE CALL FIRST All specifications are subject to change without notice. All images are for reference only. To ensure the highest satisfaction, we strongly recommend you view an actual sample for product style and construction.

Wall Cabinet - 42"H

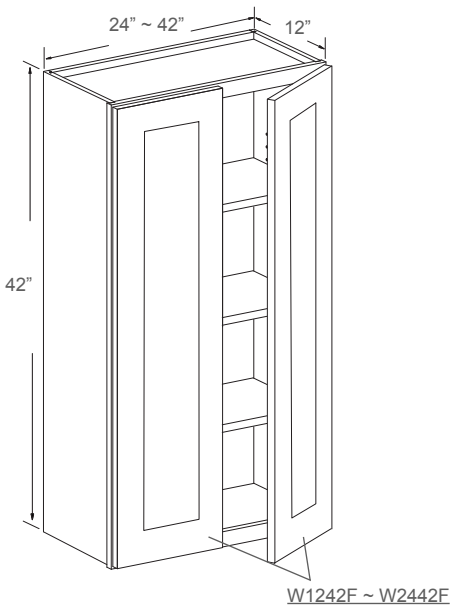

W1242F ~ W2442F

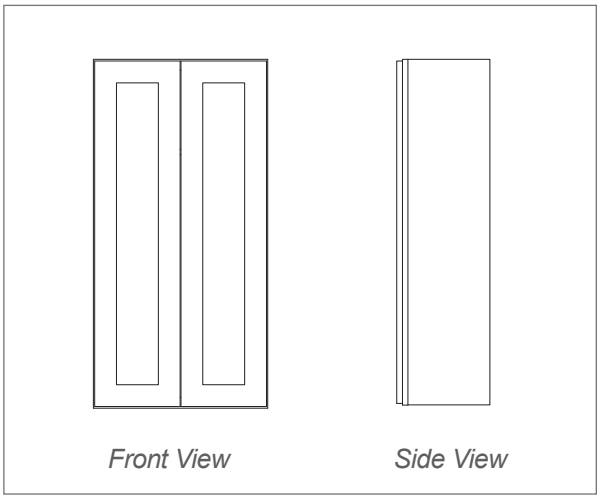

Features

- 2 Doors
- 3 Adjustable Shelves

Notes: Underlined Item Codes Indicate Replacement Parts.

	Item Code	Dimensions	Weight
*	W2442	24W x 42H x 12D	49 LB
*	W2742	27W x 42H x 12D	55 LB
*	W3042	30W x 42H x 12D	60 LB
*	W3342	33W x 42H x 12D	63 LB
*	W3642	36W x 42H x 12D	69 LB
*	W4242	42W x 42H x 12D	78 LB

Wall Cabinet Glass Insert Door - 12"H

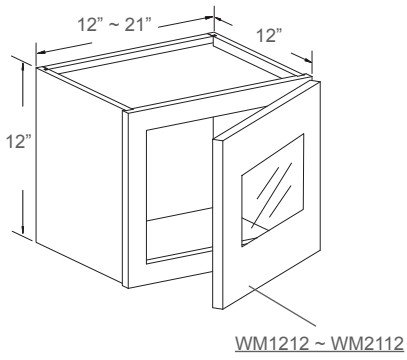

WM1212 ~ WM2112

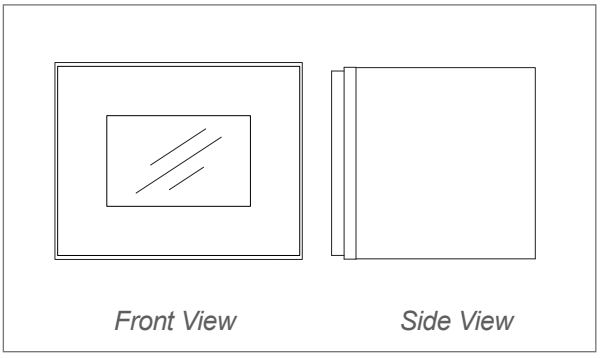

Features

- 1 Door
- No Shelf
- Matching Color Interior

Notes: Underlined Item Codes Indicate Replacement Parts.

Notes: Glass Insert Not Included

	Item Code	Dimensions	Weight
*	WM1212H	12W x 12H x 12D	10 LB
*	WM1512H	15W x 12H x 12D	12 LB
*	WM1812H	18W x 12H x 12D	13 LB
*	WM2112H	21W x 12H x 12D	15 LB

PLEASE CALL FIRST Availability for a particular product style and color may vary depending on locations.
Please check with your local *J&K Cabinetry* authorized wholesaler for current availability before planning your projects.

Wall Cabinet Glass Insert Door - 12”H & 18”H

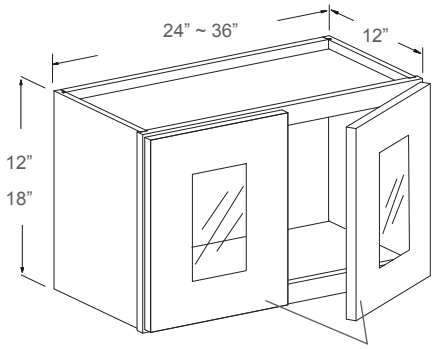

WM1212 ~ WM3312

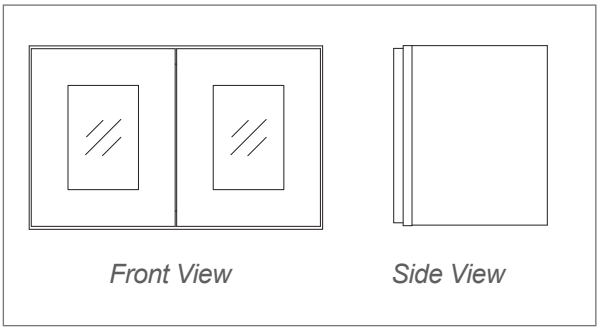

	Item Code	Dimensions	Weight
*	WM2412H	24W x 12H x 12D	17 LB
*	WM2712H	27W x 12H x 12D	19 LB
*	WM3012H	30W x 12H x 12D	21 LB
*	WM3312H	33W x 12H x 12D	21 LB
*	WM3612H	36W x 12H x 12D	25 LB

Notes: Underlined Item Codes Indicate Replacement Parts.

Features

- 2 Doors
- No Shelf
- Matching Color Interior

Notes: Glass Inserts NOT Included

Wall Cabinet Glass Insert Door - 30”H & 36”H

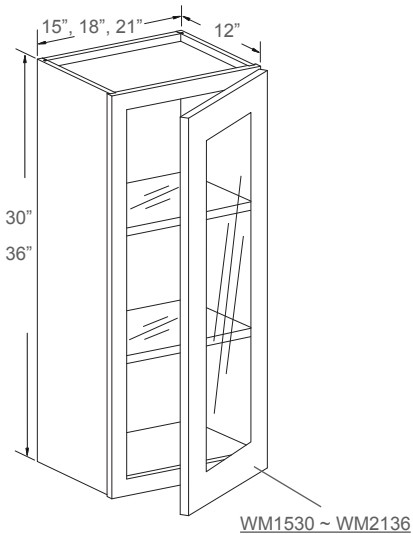

WM1530 ~ WM2136

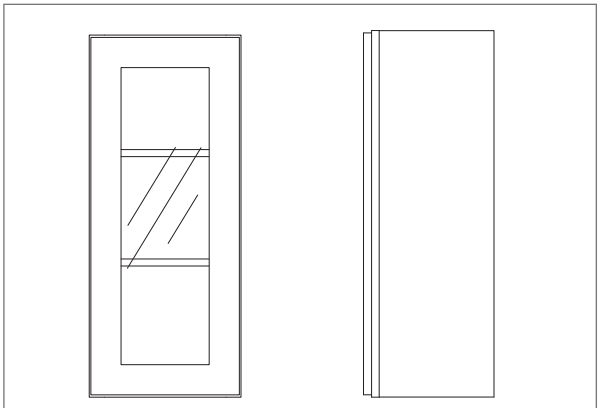

	Item Code	Dimensions	Weight
	WM1530H	15W x 30H x 12D	20 LB
	WM1830H	18W x 30H x 12D	22 LB
*	WM2130H	21W x 30H x 12D	25 LB
	WM1536H	15W x 36H x 12D	23 LB
	WM1836H	18W x 36H x 12D	25 LB
*	WM2136H	21W x 36H x 12D	28 LB

Notes: Underlined Item Codes Indicate Replacement Parts.

Features

- 1 Door
- 2 Adjustable Glass Shelves
- Matching Color Interior

Notes: Glass Shelves And Glass Insert NOT Included

PLEASE CALL FIRST All specifications are subject to change without notice. All images are for reference only. To ensure the highest satisfaction, we strongly recommend you view an actual sample for product style and construction.

Wall Cabinet Glass Insert Door - 30"H & 36"H

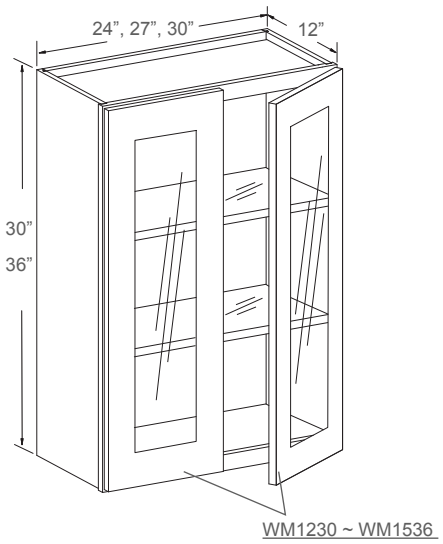

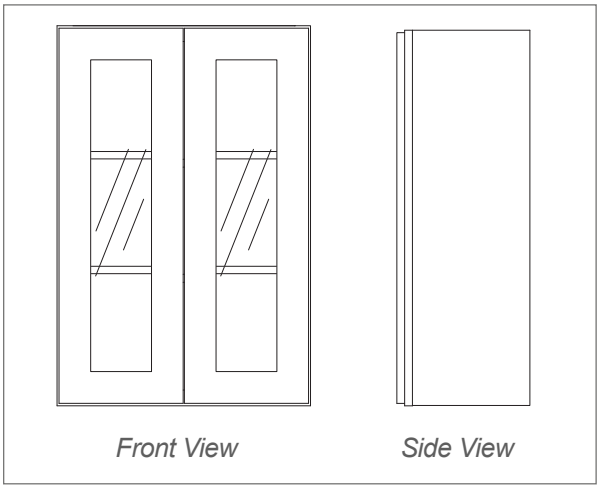

Features

- 2 Doors
- 2 Adjustable Glass Shelves
- Matching Color Interior

Notes: Underlined Item Codes Indicate Replacement Parts.

Notes: Glass Shelves And Glass Inserts NOT Included

	Item Code	Dimensions	Weight
	WM2430H	24W x 30H x 12D	28 LB
*	WM2730H	27W x 30H x 12D	30 LB
	WM3030H	30W x 30H x 12D	32 LB
	WM2436H	24W x 36H x 12D	33 LB
*	WM2736H	27W x 36H x 12D	34 LB
	WM3036H	30W x 36H x 12D	36 LB

Wall Cabinet Glass Insert Door - 42"H

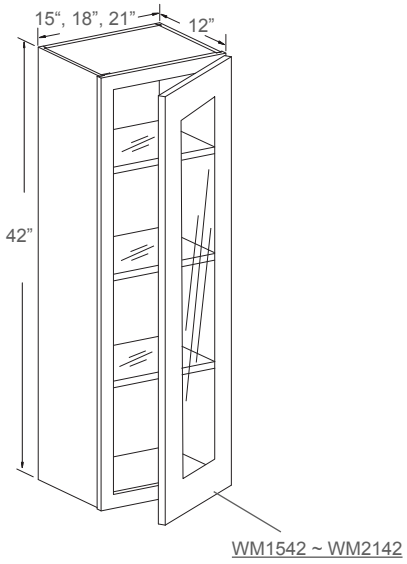

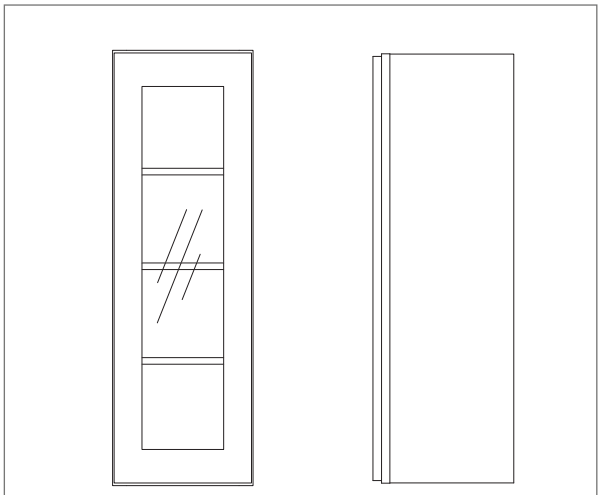

Features

- 1 Door
- 3 Adjustable Glass Shelves
- Matching Color Interior

Notes: Underlined Item Codes Indicate Replacement Parts.

Notes: Glass Shelves And Glass Insert NOT Included

	Item Code	Dimensions	Weight
	WM1542H	15W x 42H x 12D	27 LB
	WM1842H	18W x 42H x 12D	28 LB
*	WM2142H	21W x 42H x 12D	32 LB

PLEASE CALL FIRST Availability for a particular product style and color may vary depending on locations.
Please check with your local *J&K Cabinetry* authorized wholesaler for current availability before planning your projects.

Wall Cabinet Glass Insert Door - 42”H

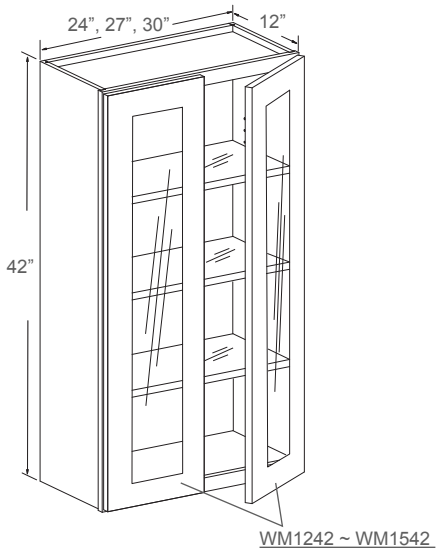

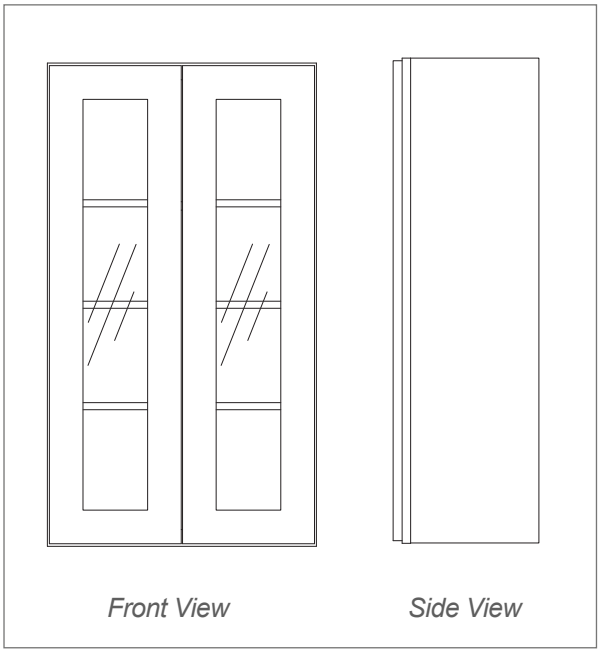

Features

- 2 Doors
- 3 Adjustable Glass Shelves
- Matching Color Interior

Notes: Glass Shelves And Glass Inserts NOT Included

Notes:
Underlined Item Codes Indicate Replacement Parts.

	Item Code	Dimensions	Weight
	WM2442H	24W x 42H x 12D	38 LB
*	WM2742H	27W x 42H x 12D	40 LB
	WM3042H	30W x 42H x 12D	42 LB

Refrigerator Wall Cabinet - 12”H & 15”H

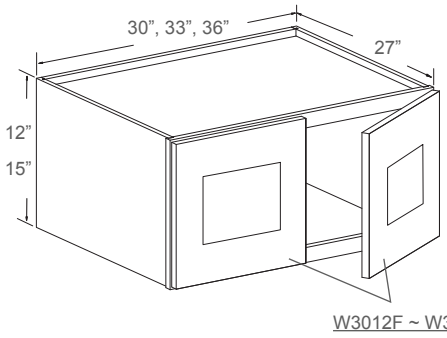

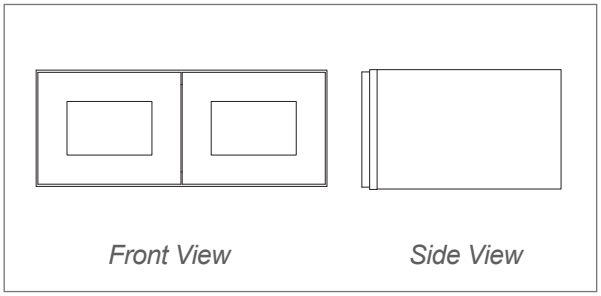

Features

- 2 Doors
- No Shelf

Notes:
Underlined Item Codes Indicate Replacement Parts.

	Item Code	Dimensions	Weight
*	W301227	30W x 12H x 27D	35 LB
*	W331227	33W x 12H x 27D	38 LB
	W361227	36W x 12H x 27D	40 LB
*	W301527	30W x 15H x 27D	38 LB
*	W331527	33W x 15H x 27D	40 LB
	W361527	36W x 15H x 27D	45 LB

PLEASE CALL FIRST All specifications are subject to change without notice. All images are for reference only. To ensure the highest satisfaction, we strongly recommend you view an actual sample for product style and construction.

Refrigerator Wall Cabinet - 18”/21”/24”H

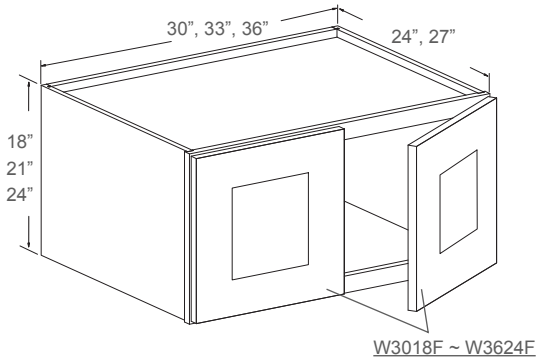

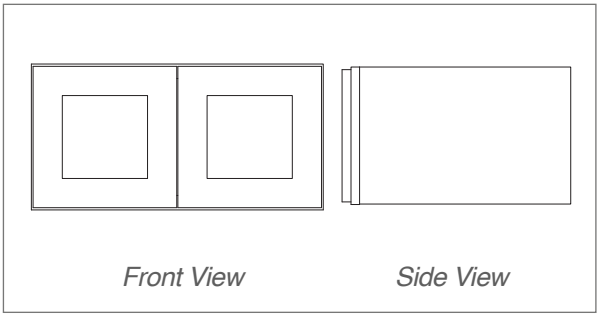

Features

- 2 Doors
- No Shelf

Notes: 1 Adjustable Shelf In 24”H Cabinets.

Notes: Underlined Item Codes Indicate Replacement Parts.

	Item Code	Dimensions	Weight
*	W301827	30W x 18H x 27D	41 LB
*	W331827	33W x 18H x 27D	42 LB
	W361827	36W x 18H x 27D	46 LB
*	W302127	30W x 21H x 27D	46 LB
*	W332127	33W x 21H x 27D	49 LB
	W362127	36W x 21H x 27D	51 LB
*	W302427	30W x 24H x 27D	57 LB
	W332427	33W x 24H x 27D	59 LB
	W362427	36W x 24H x 27D	61 LB

Wall Diagonal Corner - 30”H & 36”H

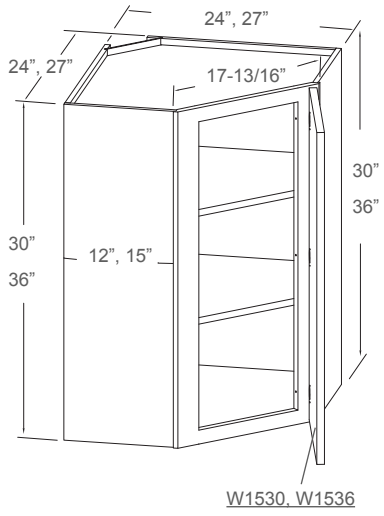

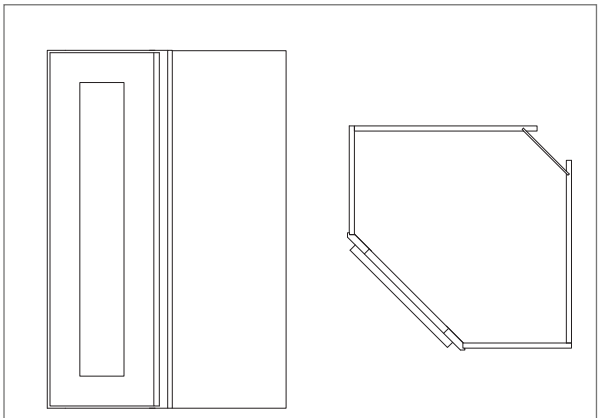

Features

- 1 Door
- 2 Adjustable Shelves

Notes: Underlined Item Codes Indicate Replacement Parts.

Item Code	Dimensions	Weight
WDC2430	24W x 30H x 12D	55 LB
WDC2436	24W x 36H x 12D	61 LB
WDC273615	27W x 36H x 15D	74 LB

PLEASE CALL FIRST Availability for a particular product style and color may vary depending on locations. Please check with your local *J&K Cabinetry* authorized wholesaler for current availability before planning your projects.

Wall Diagonal Corner - 42"H

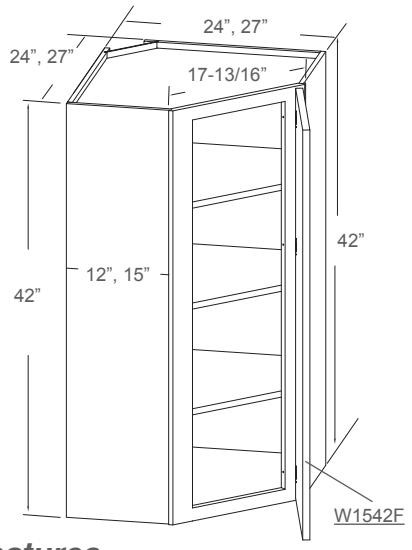

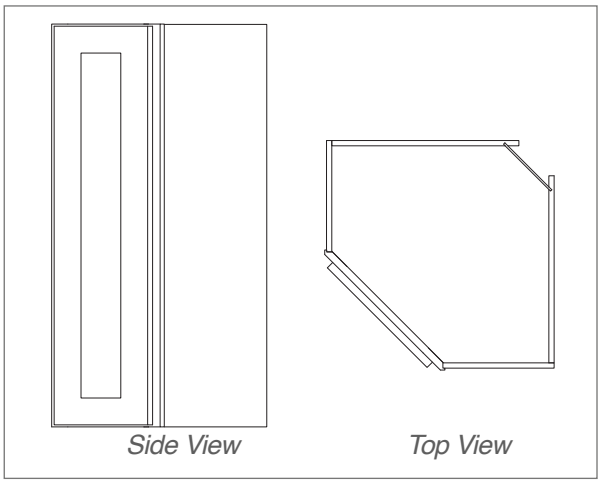

Features

- 1 Door
- 3 Adjustable Shelves

Notes: Underlined Item Codes Indicate Replacement Parts.

Item Code	Dimensions	Weight
WDC2442	24W x 42H x 12D	72 LB
WDC274215	27W x 42H x 15D	87 LB

Wall Diagonal Corner Glass Insert Door - 12"H

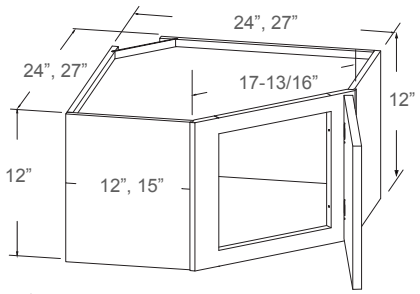

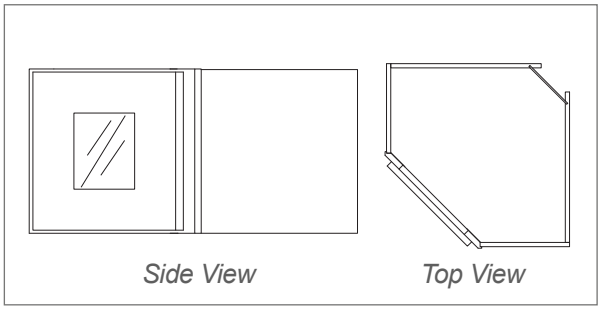

Features

- 1 Door
- No Shelf
- Matching Color Interior

Notes: Glass Insert NOT Included

	Item Code	Dimensions	Weight
*	WMDC2412H	24W x 12H x 12D	25 LB
*	WMDC271215H	27W x 12H x 15D	29 LB

Wall Diagonal Corner

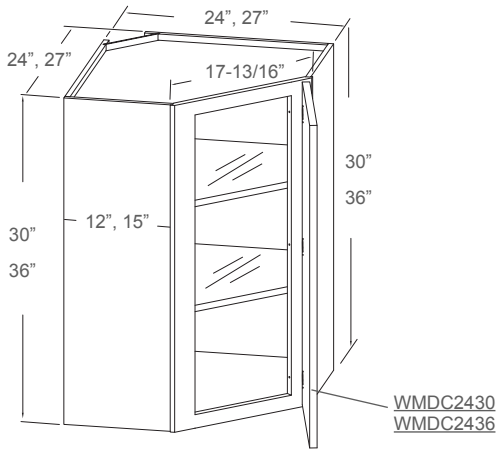

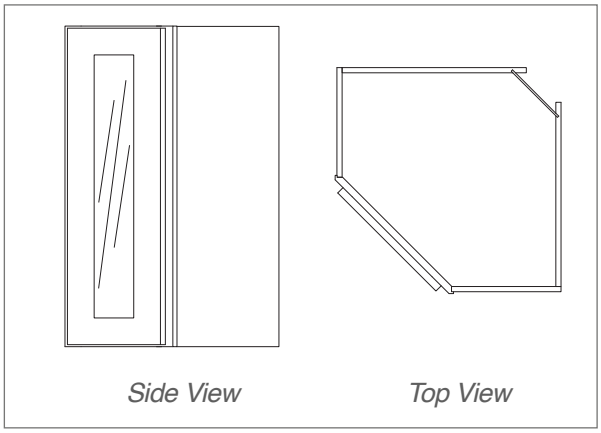

Features

- 1 Door
- 2 Adjustable Glass Shelves
- Matching Color Interior

Notes: Underlined Item Codes Indicate Replacement Parts.

Notes: Glass Shelves And Glass Insert NOT Included

Item Code	Dimensions	Weight
WMDC2430H	24W x 30H x 12D	39 LB
WMDC2436H	24W x 36H x 12D	46 LB
WMDC273615H	27W x 36H x 15D	54 LB

PLEASE CALL FIRST All specifications are subject to change without notice. All images are for reference only. To ensure the highest satisfaction, we strongly recommend you view an actual sample for product style and construction.

Wall Diagonal Corner Glass Insert Door - 42"H

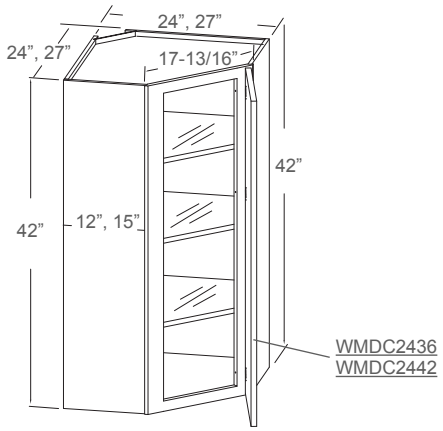

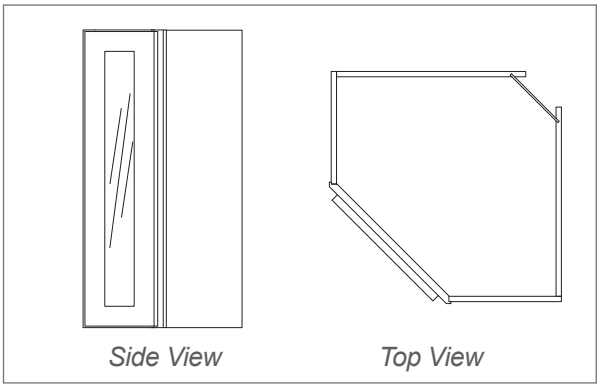

Features

- 1 Door
- 3 Adjustable Glass Shelves
- Matching Color Interior

Notes: Glass Shelves And Glass Insert NOT Included

Notes: Underlined Item Codes Indicate Replacement Parts.

Item Code	Dimensions	Weight
WMDC2442H	24W x 42H x 12D	50 LB
WMDC274215H	27W x 42H x 15D	63 LB

Wall End Corner - 30"H & 36"H

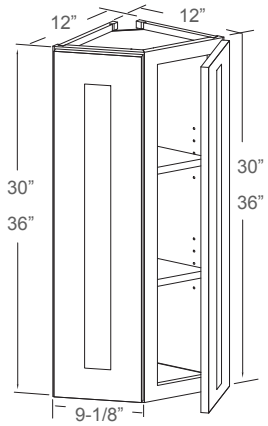

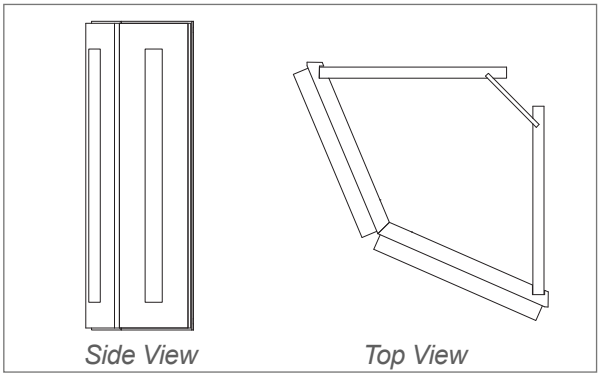

Features

- 2 Doors
- 2 Adjustable Shelves

Item Code	Dimensions	Weight
WEC1230	12W x 30H x 12D	23 LB
WEC1236	12W x 36H x 12D	27 LB

Wall End Corner - 42"H

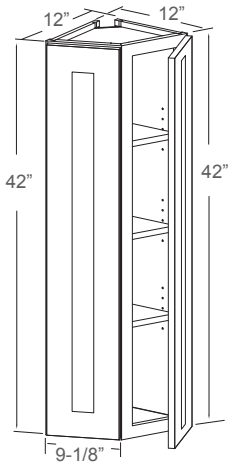

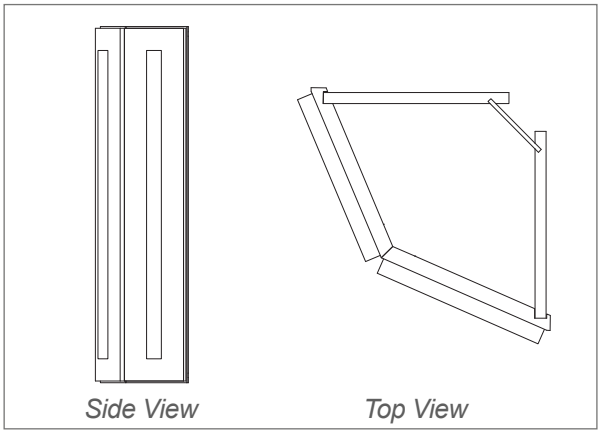

Features

- 2 Doors
- 3 Adjustable Shelves

Item Code	Dimensions	Weight
WEC1242	12W x 42H x 12D	30 LB

PLEASE CALL FIRST Availability for a particular product style and color may vary depending on locations.
Please check with your local *J&K Cabinetry* authorized wholesaler for current availability before planning your projects.

Wall End Shelf - 30”H & 36”H

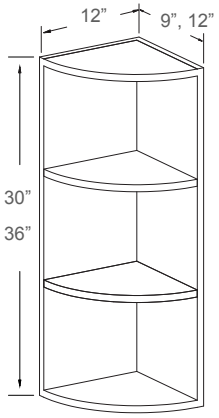

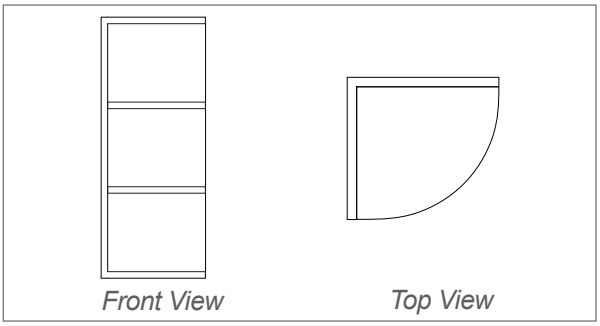

Features

- 3 Fixed Shelves
- Matching Color Finish

Item Code	Dimensions	Weight
WES0930L/R	9W x 30H x 12D	16 LB
WES0936L/R	9W x 36H x 12D	17 LB

Wall End Shelf - 42”H

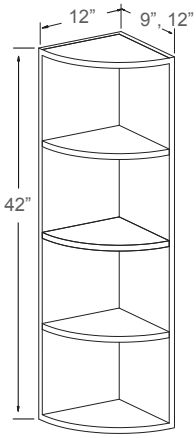

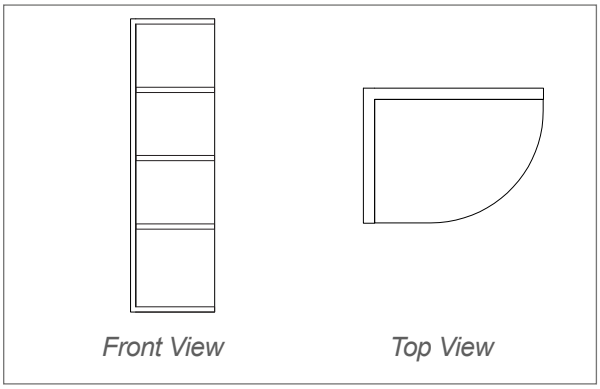

Features

- 4 Fixed Shelves
- Matching Color Finish

Item Code	Dimensions	Weight
WES0942L/R	9W x 42H x 12D	21 LB

Microwave - 30”/ 36”/ 42”H

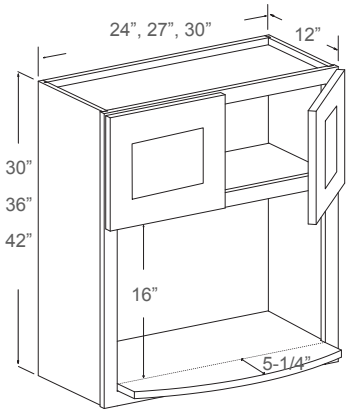

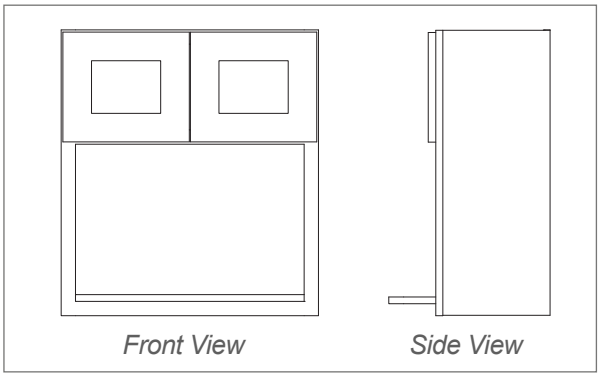

Features

- 2 Doors
- No Shelf
- 1 Open Shelf with 16”H (Shelf overhang 5-1/4”)
- Matching Color Finish

Item Code	Dimensions	Weight
WBL2730	27W x 30H x 12D	36 LB
WBL2736	27W x 36H x 12D	42 LB
WBL2742	27W x 42H x 12D	47 LB

PLEASE CALL FIRST All specifications are subject to change without notice. All images are for reference only. To ensure the highest satisfaction, we strongly recommend you view an actual sample for product style and construction.

Glass Shelf - Tempered

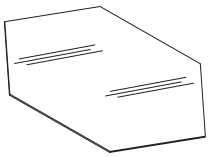

Shown GSDC##

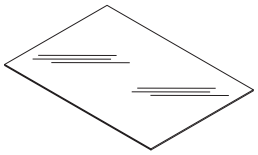

Shown GS##

Features

- Use On WM#####H Cab.

Notes: Caution When Shipping.

	Item Code	Weight
	GS18	5 LB
*	GS21	6 LB
	GS24	7 LB
	GS27	8 LB
	GS30	8 LB
	GS33	9 LB
	GSDC24	15 LB
	GSDC27	19 LB

Glass Insert - Tempered - Grid Pattern

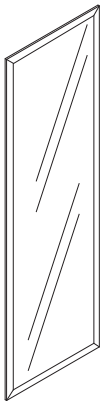

02
Beveled Edge

Style	Beveled Edge
Size Code	A02/K02/E02

Features

- Use On WM#####H
- WM24##H ~ WM36##H Cab: Need Two Glass Inserts.

Notes: Caution When Shipping.

	Item Code	Weight
*	WM1212G-A02/ K02/ E02	1 LB
*	WM1230G-A02/ K02/ E02	3 LB
*	WM1236G-A02/ K02/ E02	4 LB
*	WM1242G-A02/ K02/ E02	4 LB
*	WM1512G-A02/ K02/ E02	1 LB
*	WM1530G-A02/ K02/ E02	4 LB
*	WM1536G-A02/ K02/ E02	5 LB
*	WM1542G-A02/ K02/ E02	6 LB
*	WM1812G-A02/ K02/ E02	2 LB
*	WM1830G-A02/ K02/ E02	6 LB
*	WM1836G-A02/ K02/ E02	7 LB
*	WM1842G-A02/ K02/ E02	8 LB
*	WM2112G-A02/ K02/ E02	2 LB
*	WM2130G-A02/ K02/ E02	7 LB
*	WM2136G-A02/ K02/ E02	9 LB
*	WM2142G-A02/ K02/ E02	10 LB
*	WM2712G-A02/ K02/ E02	3 LB
*	WM2730G-A02/ K02/ E02	4 LB
*	WM2736G-A02/ K02/ E02	5 LB
*	WM2742G-A02/ K02/ E02	5 LB
*	WM3312G-A02/ K02/ E02	
*		

PLEASE CALL FIRST Availability for a particular product style and color may vary depending on locations.
Please check with your local *J&K Cabinetry* authorized wholesaler for current availability before planning your projects.

PANTRY & OVEN CABINETS



Pantry Cabinet - 84”/90”/96”H

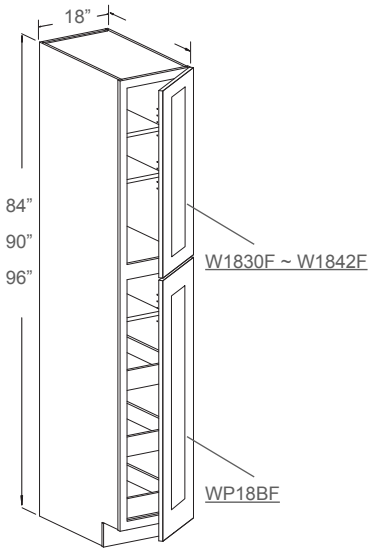

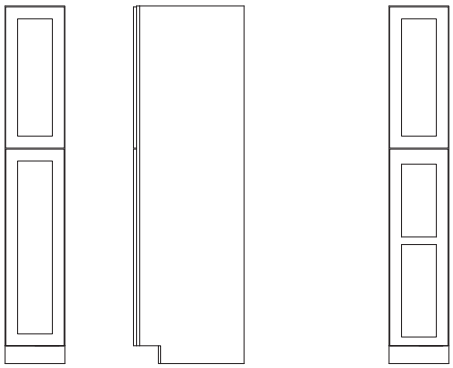

Front View Side View

Notes:
E1 and E2 pantry doors will have a cross rail mid-way on bottom door.

Features

- 2 Doors
- 2 Adjustable Top Shelves
- 1 Adjustable Middle Shelf
- 3 Bottom Roll-Out Trays

Notes:
Underlined Item Codes Indicate Replacement Parts.

Notes: 3 Adjustable Top Shelves In 96”H Cabinet.

Item Code	Dimensions	Weight
WP188427	18W x 84H x 27D	154 LB
WP189027	18W x 90H x 27D	160 LB
WP189627	18W x 96H x 27D	165 LB

Pantry Cabinet - 84”/90”/96”H

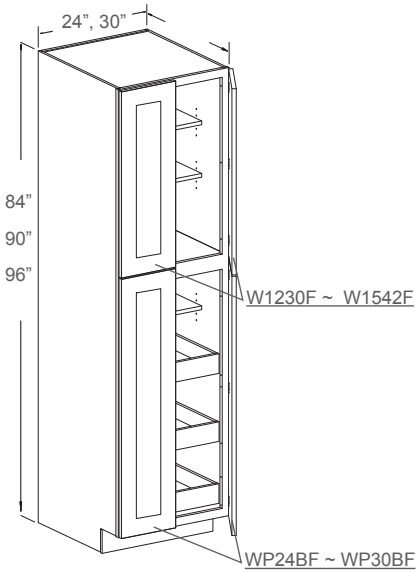

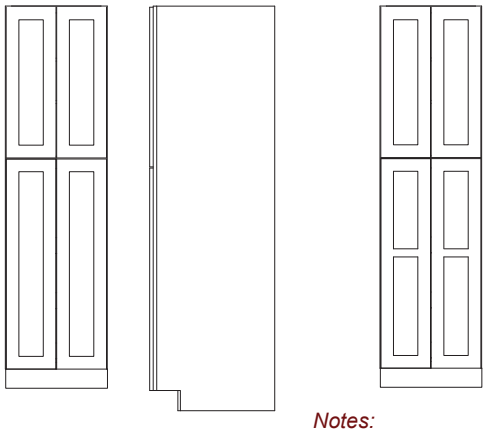

Front View Side View

Notes:
E1 and E2 pantry doors will have a cross rail mid-way on bottom door.

Features

- 4 Doors
- 2 Adjustable Top Shelves
- 1 Adjustable Middle Shelf
- 3 Bottom Roll-Out Trays

Notes:
Underlined Item Codes Indicate Replacement Parts.

Notes:
3 Adjustable Top Shelves In 96”H Cabinet.

Item Code	Dimensions	Weight
WP248427	24W x 84H x 27D	176 LB
WP308427	30W x 84H x 27D	196 LB
WP249027	24W x 90H x 27D	184 LB
WP309027	30W x 90H x 27D	211 LB
WP249627	24W x 96H x 27D	190 LB
WP309627	30W x 96H x 27D	225 LB

PLEASE CALL FIRST Availability for a particular product style and color may vary depending on locations.
Please check with your local *J&K Cabinetry* authorized wholesaler for current availability before planning your projects.

Tall Oven Cabinet - 84”/90”/96”H

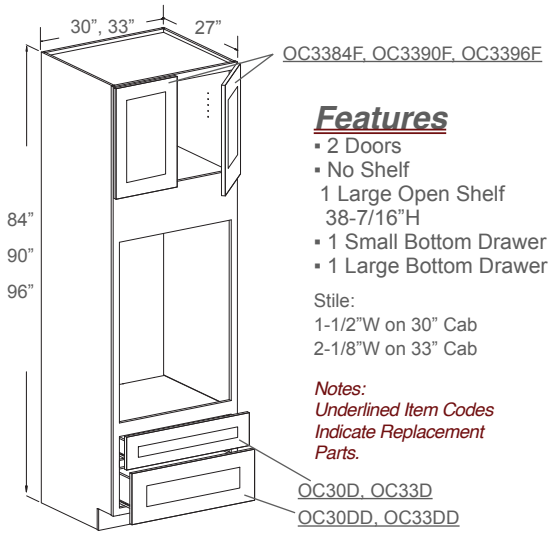

Features
- 2 Doors
- No Shelf
  1 Large Open Shelf
  38-7/16”H
- 1 Small Bottom Drawer
- 1 Large Bottom Drawer

Stile:
1-1/2”W on 30” Cab
2-1/8”W on 33” Cab

Notes:
Underlined Item Codes Indicate Replacement Parts.

Notes:
Trim or Add to Fit Oven.
1 Adjustable Top Shelf In 96”H Cabinet

Opening Shelf Dimension	
30” Cab	27”W X 38-7/16”H
33” Cab	28-3/4””W X 38-7/16”H

Door Style	Drawer Upper	Drawer Lower
K10, K3, K8, A7, M01	6”H	11-3/8”H
J5, S8, S5, S1, H9, H8, H3 B5, B7	7”H	10-7/8”H
E1, E2	7”H	10-3/4”H

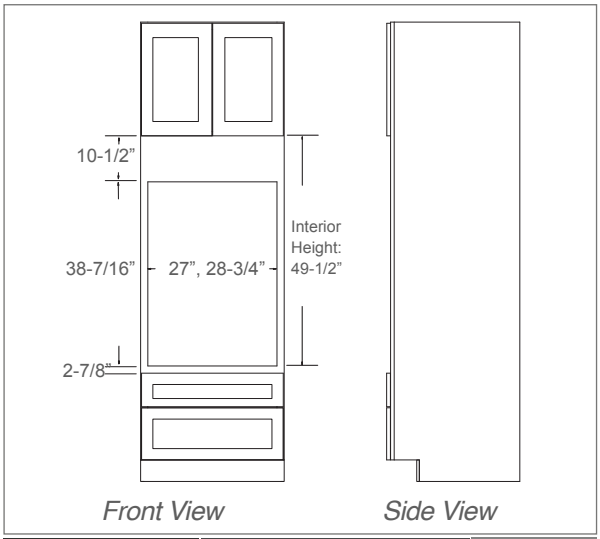

	Item Code	Dimensions	Weight
*	OC308427	30W x 84H x 27D	160 LB
*	OC338427	33W x 84H x 27D	170 LB
	OC309027	30W x 90H x 27D	170 LB
	OC339027	33W x 90H x 27D	182 LB
	OC309627	30W x 96H x 27D	182 LB
	OC339627	33W x 96H x 27D	192 LB

Tall Oven Cabinet - 84”/90”/96”H

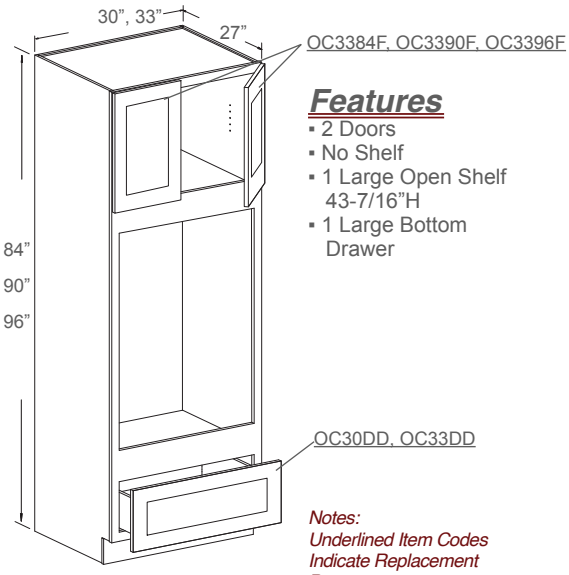

Features
- 2 Doors
- No Shelf
- 1 Large Open Shelf
  43-7/16”H
- 1 Large Bottom Drawer

Notes:
Underlined Item Codes Indicate Replacement Parts.

Notes:
Trim or Add to Fit Oven.
1 Adjustable Top Shelf In 96”H Cabinet

Opening Shelf Dimension	
30” Cab	27”W X 43-7/16”H
33” Cab	28-3/4””W X 43-7/16”H

Door Style	Drawer
K10, K3, K8, A7, M01	11-3/8”H
J5, S8, S5, S1, H9, H8, H3 B5, B7	10-7/8”H
E1, E2	10-3/4”H

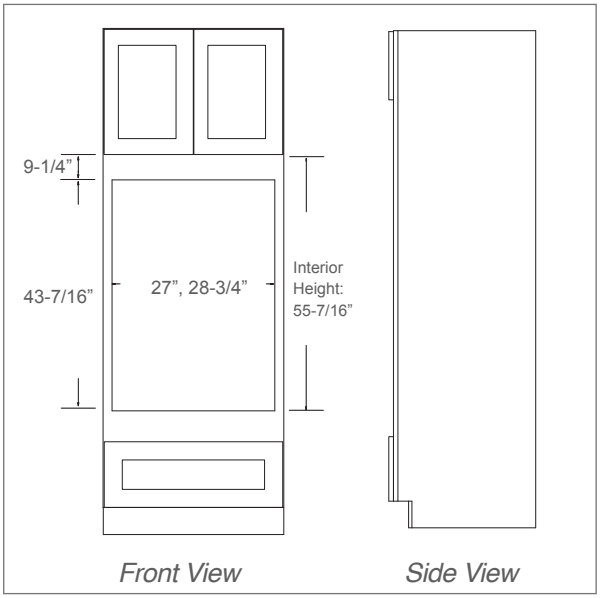

	Item Code	Dimensions	Weight
	OC308427WO	30W x 84H x 27D	132 LB
*	OC338427WO	33W x 84H x 27D	142 LB
	OC309027WO	30W x 90H x 27D	145 LB
	OC339027WO	33W x 90H x 27D	155 LB
	OC309627WO	30W x 96H x 27D	158 LB
	OC339627WO	33W x 96H x 27D	169 LB

PLEASE CALL FIRST All specifications are subject to change without notice. All images are for reference only. To ensure the highest satisfaction, we strongly recommend you view an actual sample for product style and construction.

STORAGE & ORGANIZATION



Wall Spice Drawer Cabinet

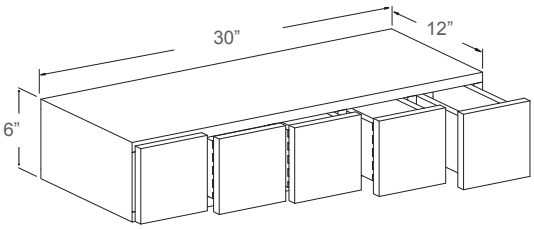

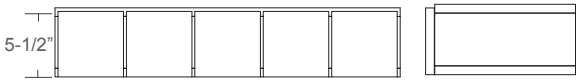

Features

- 5 Square Drawers: 5-3/4”W x 5-1/2”H (Each)

Notes: No Glides.

Item Code	Dimensions	Weight
WWRC6	30W x 6H x 12D	33 LB

Wine Rack

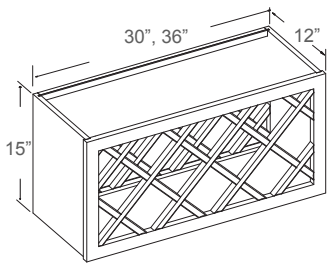

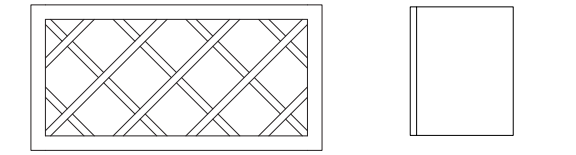

Features

- 10 Compartments in 30”W
- 14 Compartments in 36”W
- Matching Color Finish

Item Code	Dimensions	Weight
30WR	30W x 15H x 12D	22 LB
36WR	36W x 15H x 12D	25 LB

Glass Rack

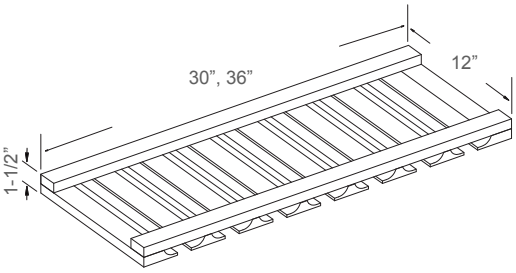

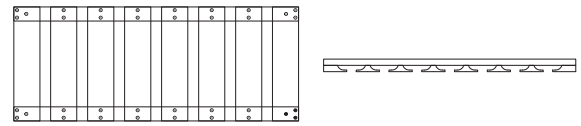

Features

- 7 Rail Openings in 30”W
- 9 Rail Openings in 36”W
- Matching Color Finish

Item Code	Dimensions	Weight
30GR	30W x 1-1/2H x 12D	4 LB
36GR	36W x 1-1/2H x 12D	4 LB

PLEASE CALL FIRST All specifications are subject to change without notice. All images are for reference only. To ensure the highest satisfaction, we strongly recommend you view an actual sample for product style and construction.

Plate Rack

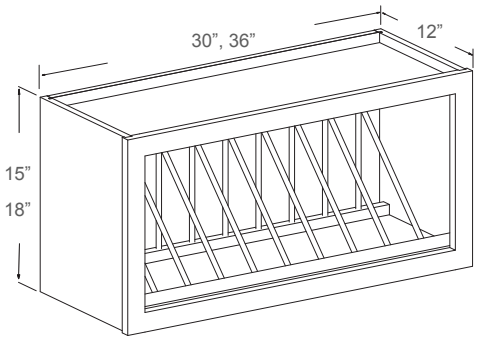

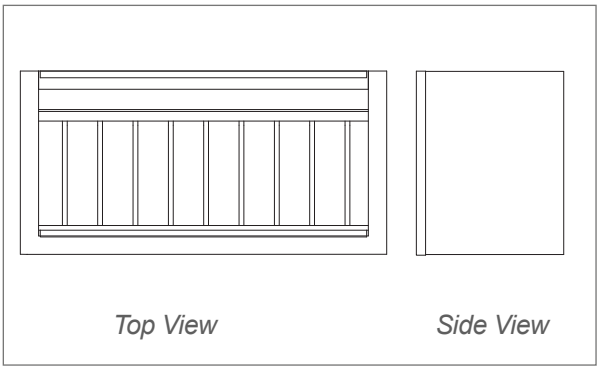

Features

- 10 Plate Slots in 30”W
- 12 Plate Slots in 36”W
- 12”H Opening in 15”H
- 15”H Opening in 18”H
- Matching Color Finish

	Item Code	Dimensions	Weight
*	WCD3018	30W x 18H x 12D	22 LB
*	WCD3618	36W x 18H x 12D	24 LB

Knee Drawer

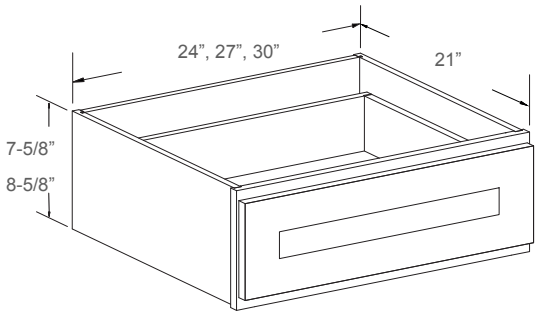

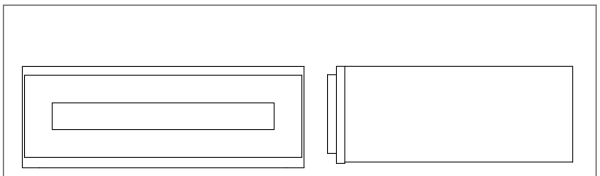

Features

- 1 Drawer

Door Style	Drawer Height
K10, K3, K8, A7, M01	6”H
J5, S8, S5, S1, H9, H8, H3 B5, B7	7”H
E1, E2	7”H

Item Code	Dimensions	Weight
FD24	24W x 21D	26 LB
FD27	27W x 21D	29 LB
FD30	30W x 21D	32 LB

Roll-Out Tray

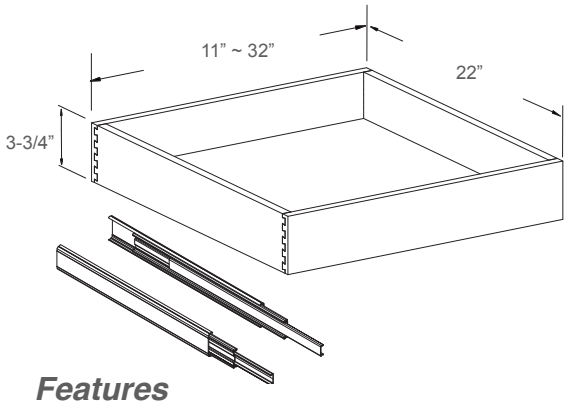

Features

- Clear Coat Finish
- 1 Pair Of Ball Bearing Soft-Close Side Glides

Notes: For 24” Deep Cabinet only.
25” Glide Sold Seperately for Pantry.

Item Code	Dimensions	Weight
RD15	11W x 3-3/4H x 22D	9 LB
RD18	14W x 3-3/4H x 22D	10 LB
RD21	17W x 3-3/4H x 22D	10 LB
RD24	20W x 3-3/4H x 22D	11 LB
RD27	23W x 3-3/4H x 22D	11 LB
RD30	26W x 3-3/4H x 22D	13 LB
RD33	29W x 3-3/4H x 22D	13 LB
RD36	32W x 3-3/4H x 22D	14 LB

PLEASE CALL FIRST Availability for a particular product style and color may vary depending on locations.
Please check with your local *J&K Cabinetry* authorized wholesaler for current availability before planning your projects.

HOODS & SPECIALTY CABINETS



Range Wood Hood

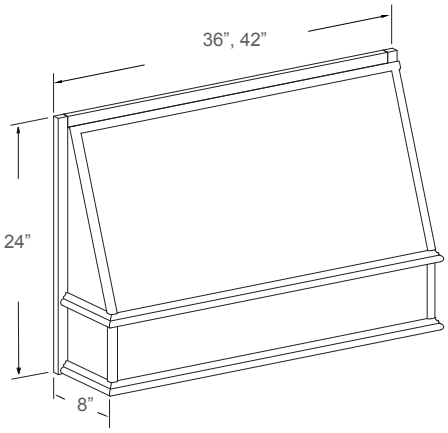

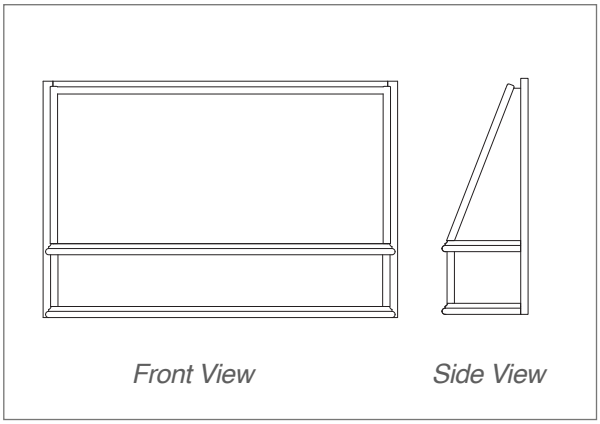

Features

- RHE3624 - Inside Dimensions: 32.5W x 7.5H x 7.5D
- RHE4224 - Inside Dimensions: 38.5W x 7.5H x 7.5D

NOT Available For E1, E2 : RHE3624, RHE4224

	Item Code	Dimensions	Weight
	RHE3624	36W x 24H x 8D	20 LB
*	RHE4224	42W x 24H x 8D	22 LB

PLEASE CALL FIRST All specifications are subject to change without notice. All images are for reference only. To ensure the highest satisfaction, we strongly recommend you view an actual sample for product style and construction.

BATHROOM VANITIES



Vanity Sink Cabinet

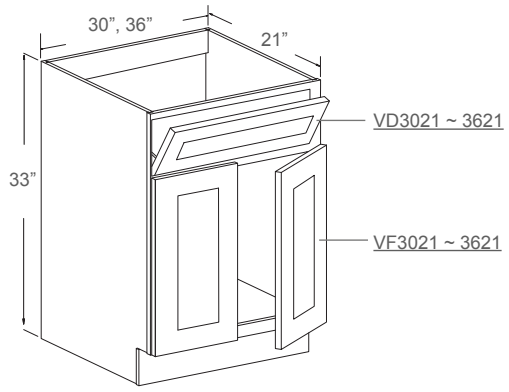

Features

- 1 Tilt-Out Drawer With Tray
- 2 Doors
- No Shelf

Notes: Back Panel Open

Notes: Underlined Item Codes Indicate Replacement Parts.

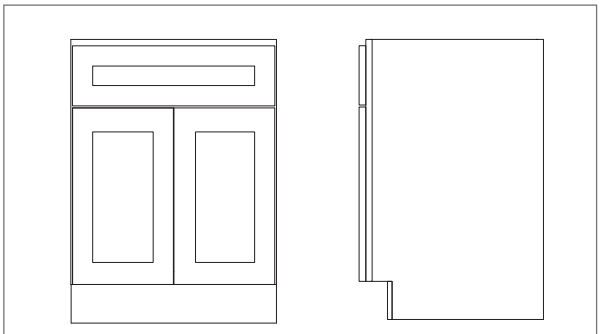

Item Code	Dimensions	Weight
FA3021	30W x 33H x 21D	45 LB
* FA3621	36W x 33H x 21D	51 LB

Vanity Sink Cabinet

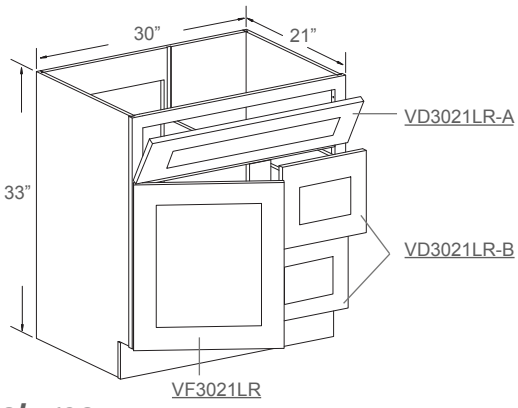

Features

- 1 Tilt-Out Drawer With Tray
- 1 Door on Left
- 2 Drawers on Right
- No Shelf

Notes: Back Panel Open On Left

Notes: Underlined Item Codes Indicate Replacement Parts.

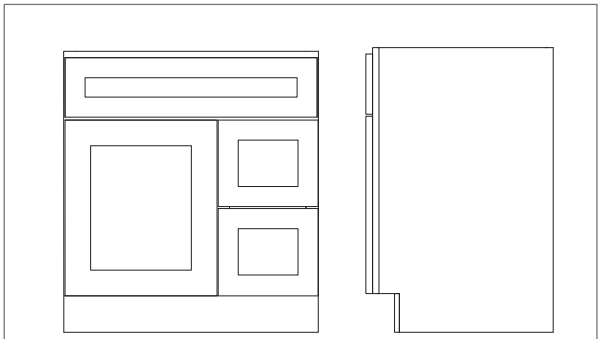

Item Code	Dimensions	Weight
FA3021DL	30W x 33H x 21D	75 LB

Vanity Sink Cabinet

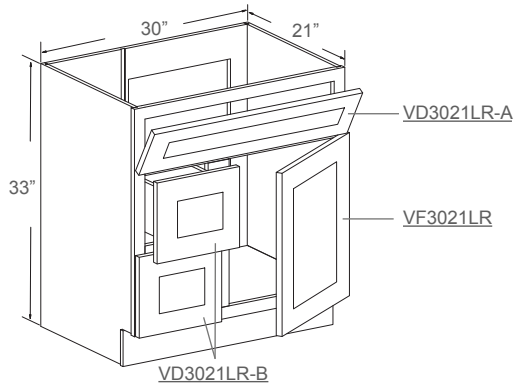

Features

- 1 Tilt-Out Drawer With Tray
- 2 Drawers on Left
- 1 Door on Right
- No Shelf

Notes: Back Panel Open On Right

Notes: Underlined Item Codes Indicate Replacement Parts.

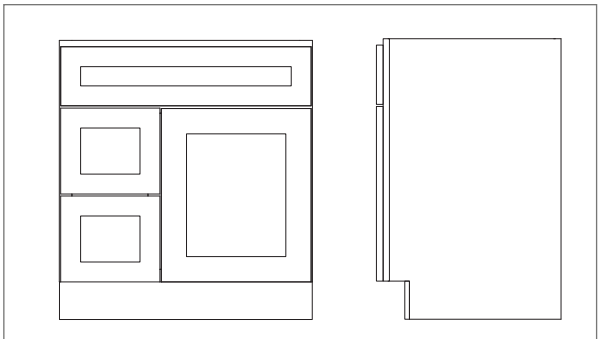

Item Code	Dimensions	Weight
FA3021DR	30W x 33H x 21D	75 LB

PLEASE CALL FIRST All specifications are subject to change without notice. All images are for reference only. To ensure the highest satisfaction, we strongly recommend you view an actual sample for product style and construction.

Vanity Sink Cabinet

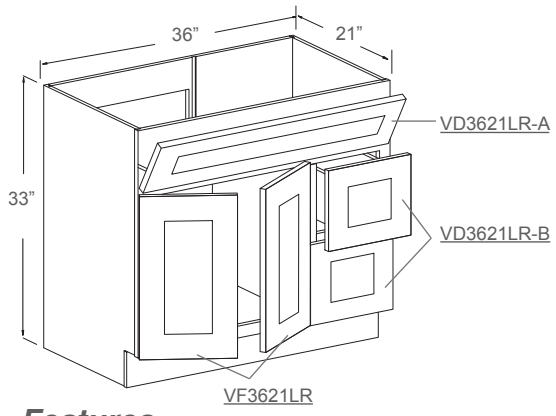

Features

- 1 Tilt-Out Drawer With Tray
- 2 Drawers on Right
- 2 Doors on Left
- No Shelf

Notes: Back Panel Open On Left

Notes: Underlined Item Codes Indicate Replacement Parts.

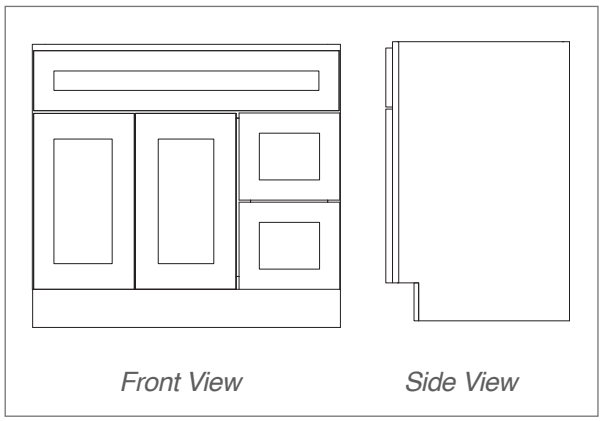

Item Code	Dimensions	Weight
FA3621DL	36W x 33H x 21D	80 LB

Vanity Sink Cabinet

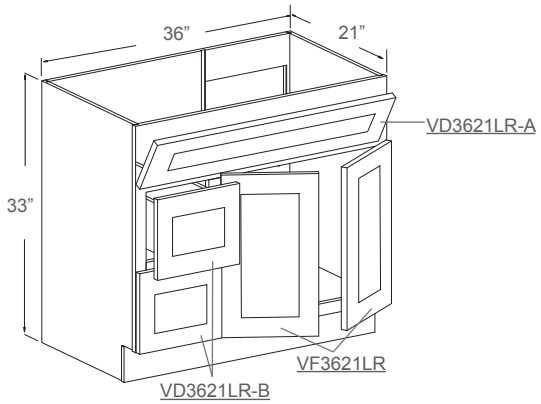

Features

- 1 Tilt-Out Drawer With Tray
- 2 Drawers on Left
- 2 Doors on Right
- No Shelf

Notes: Back Panel Open On Right

Notes: Underlined Item Codes Indicate Replacement Parts.

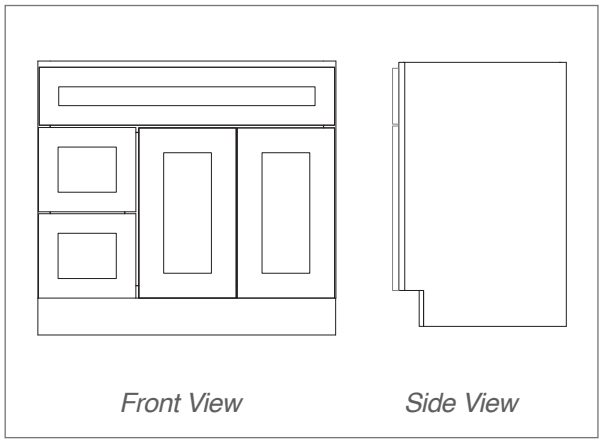

Item Code	Dimensions	Weight
FA3621DR	36W x 33H x 21D	80 LB

Vanity Sink Cabinet Curved Door

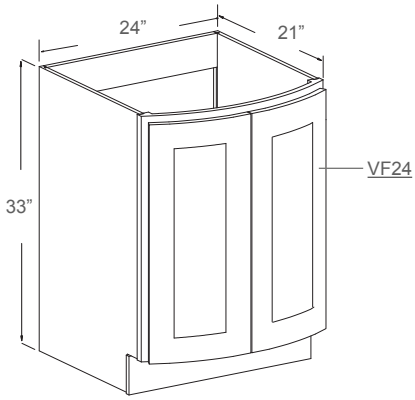

Features

- 2 Curved Doors
- No Shelf

Notes: Back Panel Open
Not Available For E1, E2, S1, S5, S8 : FSVA24

Notes: Underlined Item Codes Indicate Replacement Parts.

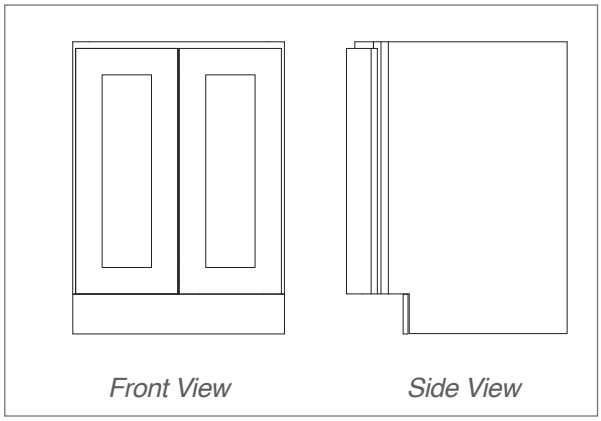

Item Code	Dimensions	Weight
* FSVA24	24W x 33H x 21D	38 LB

PLEASE CALL FIRST Availability for a particular product style and color may vary depending on locations.
Please check with your local *J&K Cabinetry* authorized wholesaler for current availability before planning your projects.

Vanity Sink Cabinet

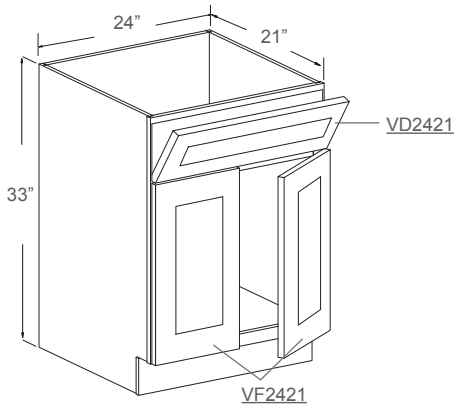

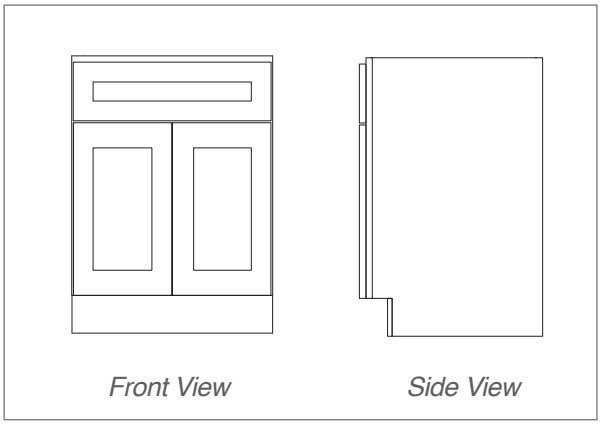

Features

- 1 Tilt-Out Drawer With Tray
- 2 Doors
- No Shelf

Notes: Back Panel NOT Open

Notes: Underlined Item Codes Indicate Replacement Parts.

Item Code	Dimensions	Weight
SVA2421	24W x 33H x 21D	42 LB

Vanity Drawer Base

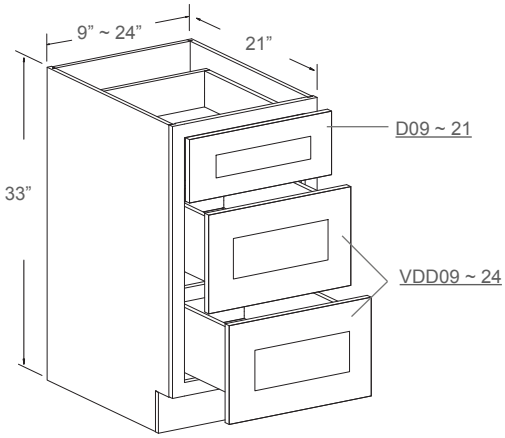

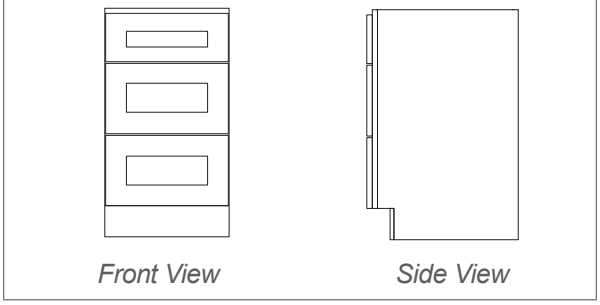

Features

- 1 Small Drawer
- 2 Large Drawers

Notes: Underlined Item Codes Indicate Replacement Parts.

	Item Code	Dimensions	Weight
*	SVA09D	9W x 33H x 21D	53 LB
	SVA12D	12W x 33H x 21D	60 LB
	SVA15D	15W x 33H x 21D	66 LB
	SVA18D	18W x 33H x 21D	70 LB
*	SVA21D	21W x 33H x 21D	75 LB
	SVA24D	24W x 33H x 21D	79 LB

Vanity Linen Cabinet

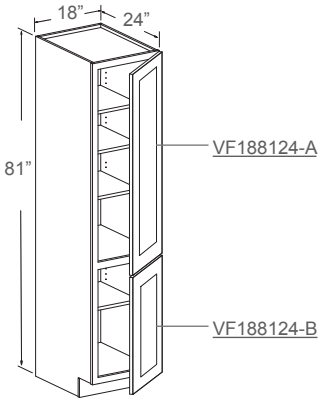

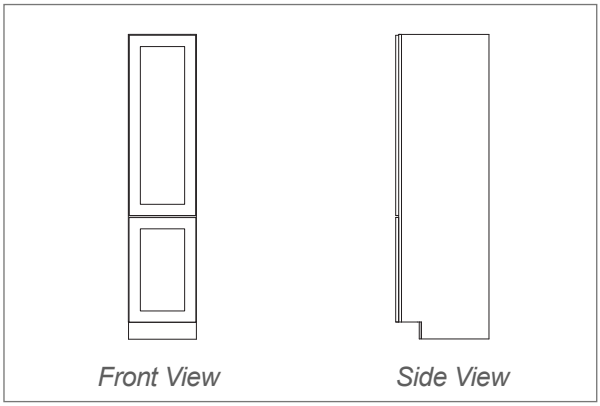

Features

- 2 Doors
- 4 Adjustable Shelves

Notes: Underlined Item Codes Indicate Replacement Parts.

Item Code	Dimensions	Weight
SVA188124P	18W x 81H x 24D	103 LB

PLEASE CALL FIRST All specifications are subject to change without notice. All images are for reference only. To ensure the highest satisfaction, we strongly recommend you view an actual sample for product style and construction.

Vanity Drawer Linen Cabinet

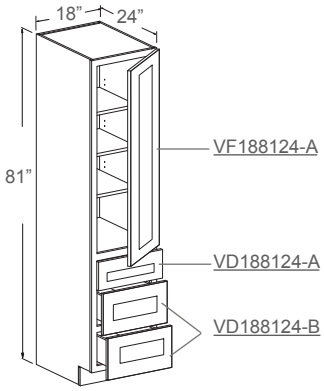

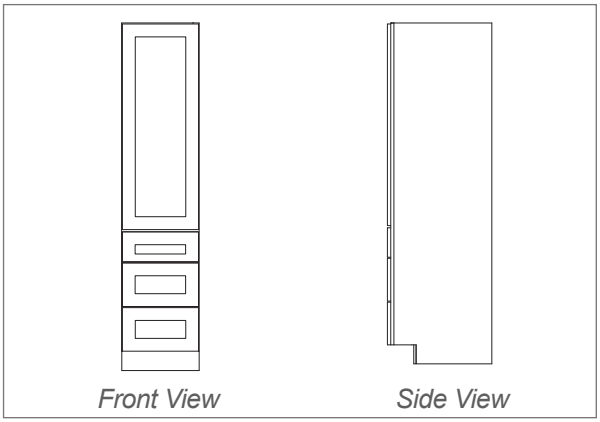

Features

- 1 Door
- 3 Adjustable Shelves
- 1 Small Bottom Drawer
- 2 Large Bottom Drawers

Notes: Underlined Item Codes Indicate Replacement Parts.

	Item Code	Dimensions	Weight
*	SVA188124D	18W x 81H x 24D	145 LB

Vanity Counter Linen Cabinet

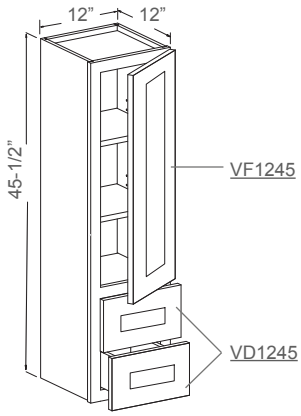

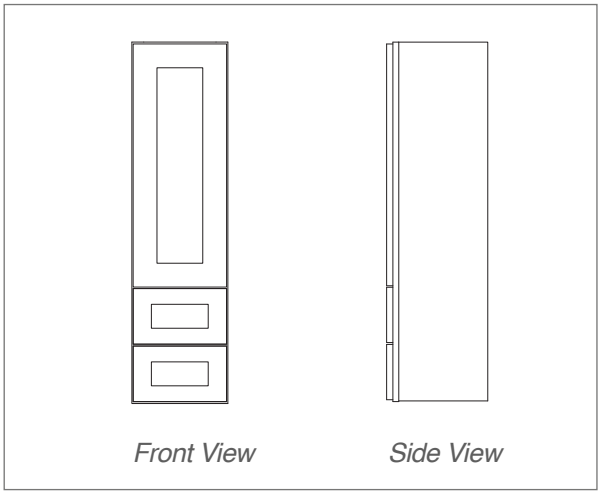

Features

- 1 Door
- 2 Adjustable Shelves
- 2 Small Drawers

Notes: Underlined Item Codes Indicate Replacement Parts.

Door Style	Drawer Height
K10, K3, K8, A7, M01	6”H
J5, S8, S5, S1, H9, H8, H3 B5, B7	7”H
E1, E2	7”H

Item Code	Dimensions	Weight
DV1245	12W x 45-1/2H x 12D	42 LB

Vanity Medicine Cabinet

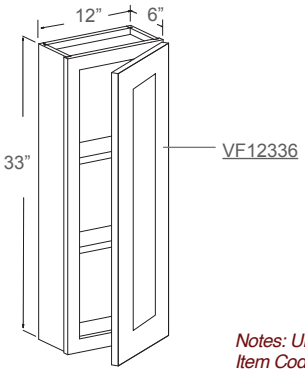

Features

- 1 Door
- 2 Adjustable Shelves

Notes: Underlined Item Codes Indicate Replacement Parts.

	Item Code	Dimensions	Weight
*	WV12336	12W x 33H x 6D	18 LB

PLEASE CALL FIRST Availability for a particular product style and color may vary depending on locations.
Please check with your local *J&K Cabinetry* authorized wholesaler for current availability before planning your projects.

Vanity Mirror

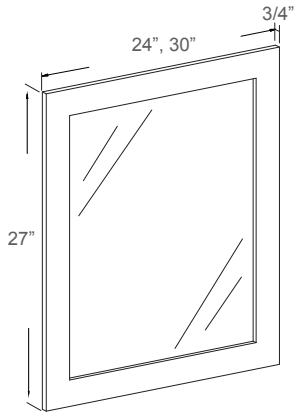

Features

- Wooden Frame
- Beveled Edge Mirror (Not Tempered)

Notes: Hanging Hardware NOT Included

Item Code	Dimensions	Weight
SVAM2427	24W x 27H x 3/4D	15 LB
SVAM3027	30W x 27H x 3/4D	20 LB

Vanity Decorative Foot

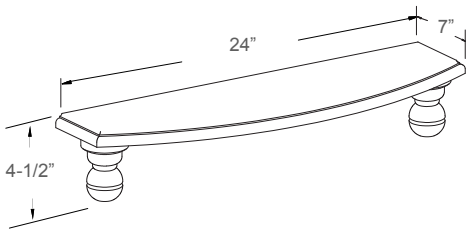

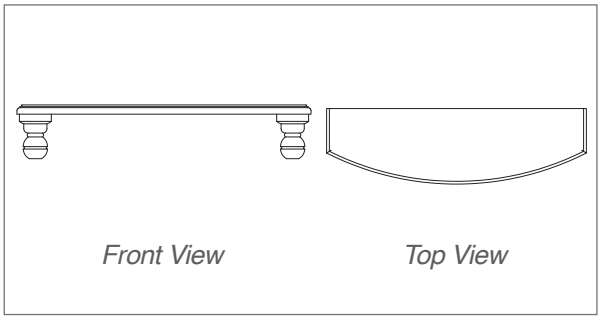

Notes: Use With Vanity Sink Cabinet Curved Door FSVA24 (see Pg.41)

	Item Code	Dimensions	Weight
*	#24	24W x 4-1/2H x 7D	3 LB

Vanity Decorative Foot

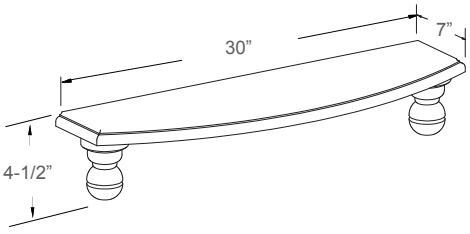

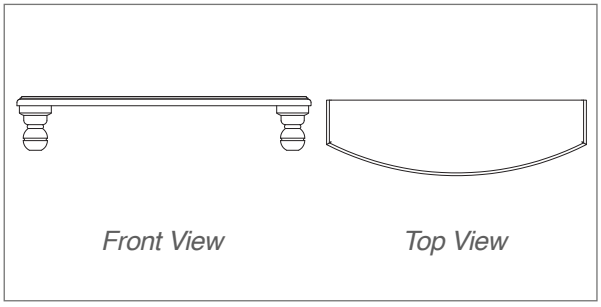

Notes: Use With Vanity Sink Cabinet Curved Door FSVA24 (see Pg.41)

	Item Code	Dimensions	Weight
*	#30	30W x 4-1/2H x 7D	4 LB

PLEASE CALL FIRST All specifications are subject to change without notice. All images are for reference only. To ensure the highest satisfaction, we strongly recommend you view an actual sample for product style and construction.

DUMMY DOORS,DRAWERS & REPLACEMENTS



Dummy Door & Drawer With Frame

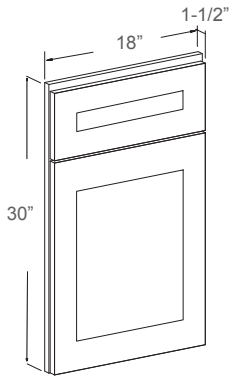

Features

- 1 Dummy Drawer
- 1 Dummy Door
- Face-Frame Attached

Notes: NOT For Replacement

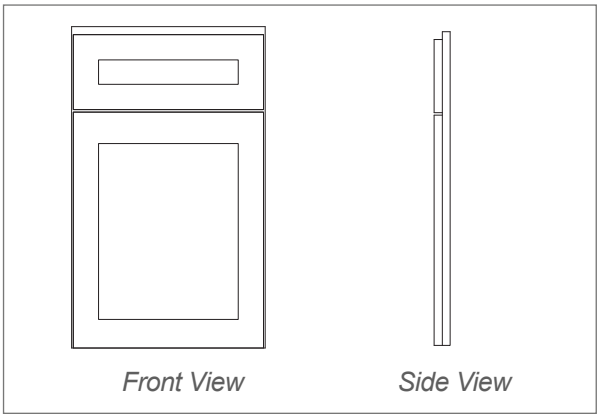

	Item Code	Dimensions	Weight
*	B18F	18W x 30H x 1-1/2D	11 LB

Dummy Door & Drawer With Frame

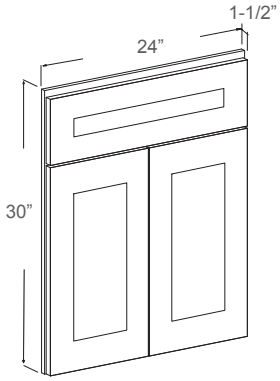

Features

- 1 Dummy Drawer
- 2 Dummy Doors
- Face-Frame Attached

Notes: NOT For Replacement

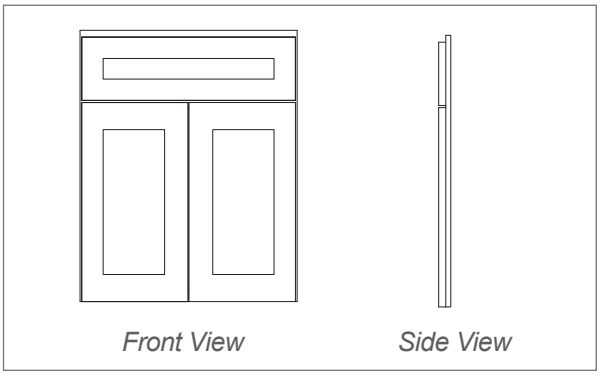

	Item Code	Dimensions	Weight
*	B24F	24W x 30H x 1-1/2D	12 LB

Dummy Door & Drawer With Frame

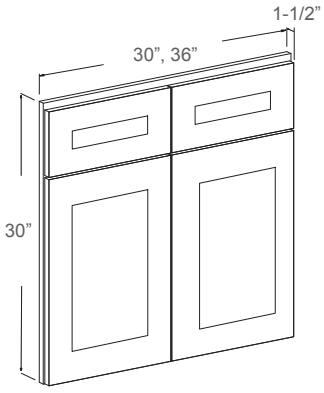

Features

- 2 Dummy Drawers
- 2 Dummy Doors
- Face-Frame Attached

Notes: NOT For Replacement

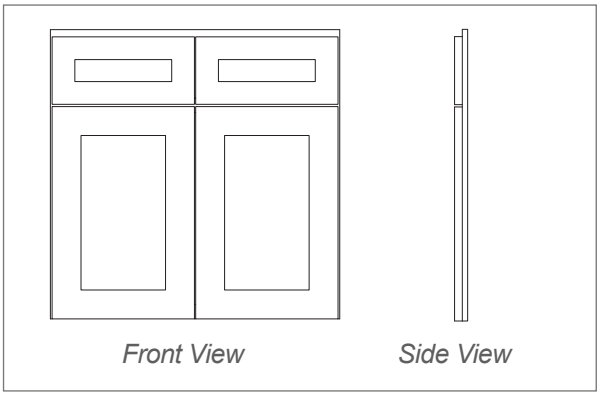

	Item Code	Dimensions	Weight
*	B30F	30W x 30H x 1-1/2D	20 LB
*	B36F	36W x 30H x 1-1/2D	24 LB

PLEASE CALL FIRST All specifications are subject to change without notice. All images are for reference only. To ensure the highest satisfaction, we strongly recommend you view an actual sample for product style and construction.

Dummy Door Panel

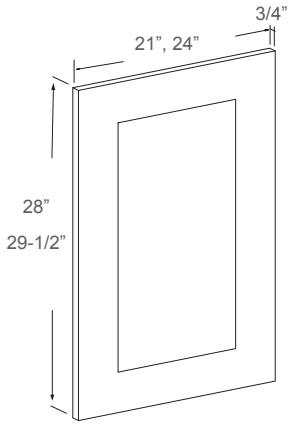

Features

- 1 Dummy Door Panel

Notes: NOT For Replacement

	Item Code	Dimensions	Weight
*	BDD21	21W x 28H x 3/4D	9 LB
	BDD24	24W x 29-1/2H x 3/4D	10 LB

Replacement Wall Door Panel - 30"/ 36"/ 42"H

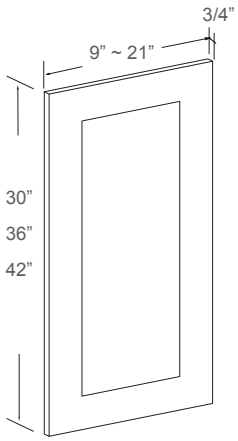

Features

- 1 Replacement Door Panel
- Predrilled Hinge Holes On The Back

Notes:
Replacement For Wall Door Panels In Cabinets:
W0930 ~ 3342 (see Pg.21,22,23)
*Replacement For Pantry **TOP** Door Panels In Cabinets:*
WP18## ~ 30## (see Pg.33)

	Item Code	Dimensions	Weight
*	W0930F	9W x 30H x 3/4D	4 LB
	W1230F	12W x 30H x 3/4D	5 LB
	W1530F	15W x 30H x 3/4D	7 LB
*	W1830F	18W x 30H x 3/4D	8 LB
*	W2130F	21W x 30H x 3/4D	9 LB
*	W2730F	13-1/2W x 30H x 3/4D	6 LB
*	W3330F	16-1/2W x 30H x 3/4D	7 LB
*	W0936F	9W x 36H x 3/4D	5 LB
	W1236F	12W x 36H x 3/4D	6 LB
*	W1536F	15W x 36H x 3/4D	7 LB
*	W1836F	18W x 36H x 3/4D	9 LB
*	W2136F	21W x 36H x 3/4D	10 LB
*	W2736F	13-1/2W x 36H x 3/4D	7 LB
*	W3336F	16-1/2W x 36H x 3/4D	8 LB
*	W0942F	9W x 42H x 3/4D	5 LB
	W1242F	12W x 42H x 3/4D	7 LB
*	W1542F	15W x 42H x 3/4D	8 LB
*	W1842F	18W x 42H x 3/4D	9 LB
*	W2142F	21W x 42H x 3/4D	11 LB
*	W2742F	13-1/2W x 42H x 3/4D	8 LB
*	W3342F	16-1/2W x 42H x 3/4D	9 LB

PLEASE CALL FIRST Availability for a particular product style and color may vary depending on locations.
Please check with your local *J&K Cabinetry* authorized wholesaler for current availability before planning your projects.

Replacement Pantry Bottom Door Panel

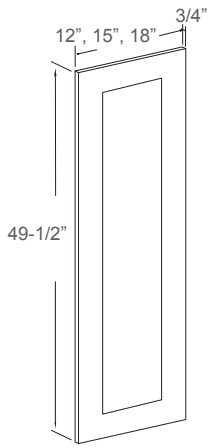

Features

- 1 Replacement Door Panel

Notes:
*Replacement For Pantry **BOTTOM** Door Panels In Cabinets: WP18## ~ 30## (see Pg.33).*

	Item Code	Dimensions	Weight
*	WP18BF	18W x 49-1/2H x 3/4D	12 LB
*	WP24BF	12W x 49-1/2H x 3/4D	8 LB
*	WP30BF	15W x 49-1/2H x 3/4D	10 LB

Dummy Pantry Upper Door Panel

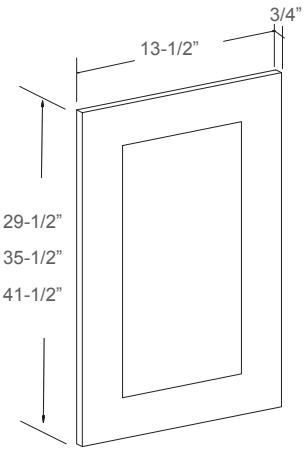

Features

- 1 Dummy Door Panel

Notes: NOT For Replacement

	Item Code	Dimensions	Weight
*	PDDU27-A	13-1/2W x 29-1/2H x 3/4D	8 LB
*	PDDU27-B	13-1/2W x 35-1/2H x 3/4D	10 LB
*	PDDU27-C	13-1/2W x 41-1/2H x 3/4D	12 LB

Dummy Pantry Lower Door Panel

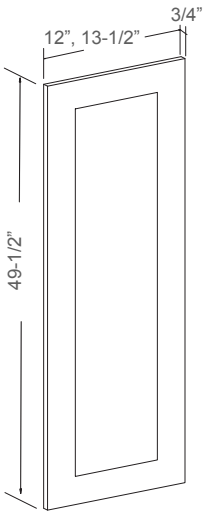

Features

- 1 Dummy Door Panel

Notes: NOT For Replacement

	Item Code	Dimensions	Weight
*	PDDL27	13-1/2W x 49-1/2H x 3/4D	9 LB

PLEASE CALL FIRST All specifications are subject to change without notice. All images are for reference only. To ensure the highest satisfaction, we strongly recommend you view an actual sample for product style and construction.

PANELS & FILLERS



Dishwasher Panel with Return Filler (L/R)

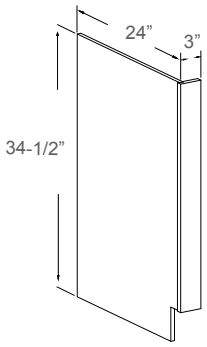

Features

- 3” Return Filler
- 5/8” Thick Panel
- Matching Color on Filler

Notes: NOT Assembled & Toe Kick NOT Included

Item Code	Dimensions	Weight
DWR (L/R)	3W x 34-1/2H x 24D	10 LB

Refrigerator Panel with Return Filler

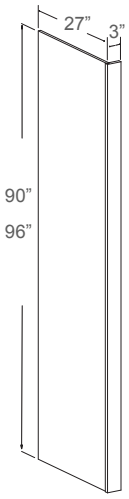

Features

- 3” Return Filler
- 5/8” Thick Panel
- Matching Color on Exterior

	Item Code	Dimensions	Weight
*	RRP9027	3W x 90H x 27D	38 LB
	RRP9627	3W x 96H x 27D	40 LB

Refrigerator Panel

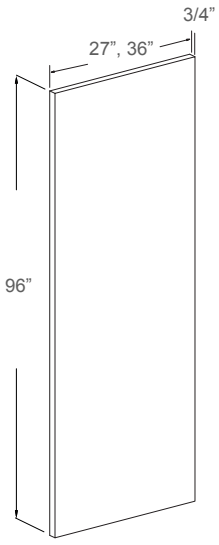

Features

- 3/4” Thick Panel
- 4 Side-Edge Banded
- Matching Color on All Sides & Surfaces

	Item Code	Dimensions	Weight
*	RRP9627*3/4	3/4W x 96H x 27D	50 LB
*	BP9636*3/4	3/4W x 96H x 36D	52 LB

PLEASE CALL FIRST All specifications are subject to change without notice. All images are for reference only. To ensure the highest satisfaction, we strongly recommend you view an actual sample for product style and construction.

Finished Skin Panel

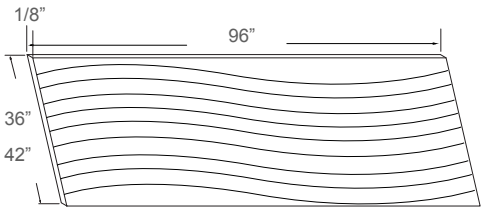

Features

- Long Grain Pattern in 36”H & 42”H Panels
- Matching Color on One Side

	Item Code	Dimensions	Weight
*	BP9636	96W x 36H x 1/8D	12 LB

Toe Kick

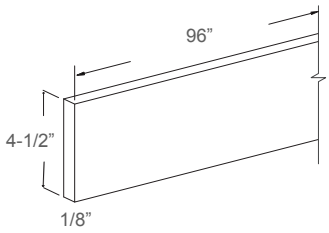

Item Code	Dimensions	Weight
TK8	4-1/2W x 96H x 1/8D	1.4 LB

Base Molding

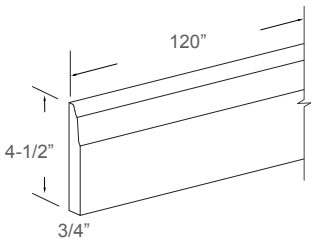

Item Code	Dimensions	Weight
BM10-4-1/2	4-1/2W x 120H x 3/4D	8 LB

Base Filler

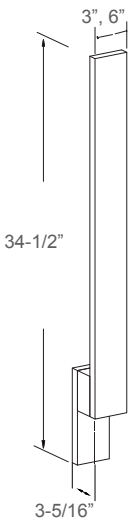

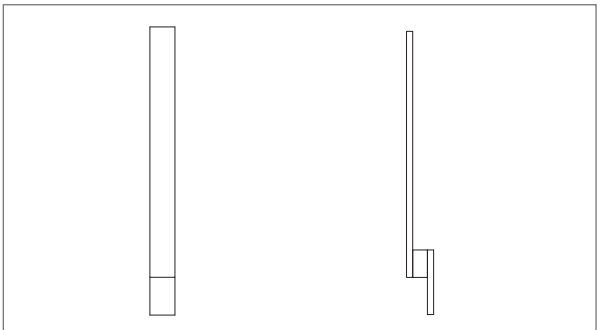

Item Code	Dimensions	Weight
BF3	3W x 34-1/2H x 3/4D	2 LB
BF6	6W x 34-1/2H x 3/4D	4 LB

PLEASE CALL FIRST Availability for a particular product style and color may vary depending on locations.
Please check with your local *J&K Cabinetry* authorized wholesaler for current availability before planning your projects.

Wall Filler

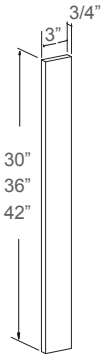

Item Code	Dimensions	Weight
WF330	3W x 30H x 3/4D	1 LB
WF336	3W x 36H x 3/4D	2 LB
WF342	3W x 42H x 3/4D	2 LB

Wall Filler

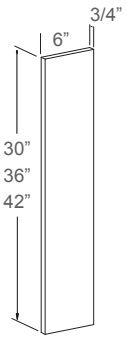

Item Code	Dimensions	Weight
WF630	6W x 30H x 3/4D	3 LB
WF636	6W x 36H x 3/4D	3 LB
WF642	6W x 42H x 3/4D	4 LB

Tall Filler

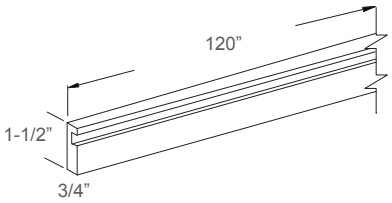

Notes:
Dadoed. Good for Refridgerator Return use and Semi-custom cabinets.

Item Code	Dimensions	Weight
CM34-1-1/2	1-1/2W x 120H x 3/4D	3 LB

Tall Filler

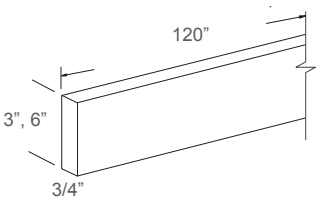

Item Code	Dimensions	Weight
CM34-3	3W x 120H x 3/4D	6 LB
CM34-6	6W x 120H x 3/4D	10 LB

PLEASE CALL FIRST All specifications are subject to change without notice. All images are for reference only. To ensure the highest satisfaction, we strongly recommend you view an actual sample for product style and construction.

MOLDINGS



Quarter Round

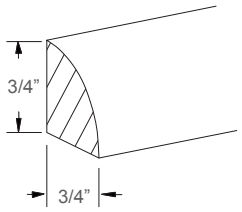

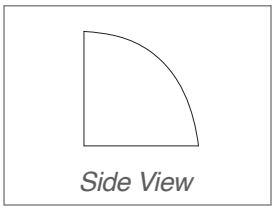

Item Code	Dimensions	Weight
QRM10	3/4H x 3/4D x 120L	1.3 LB

Outside Corner

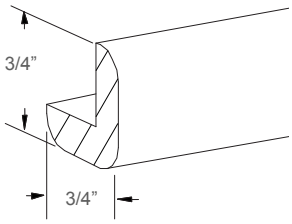

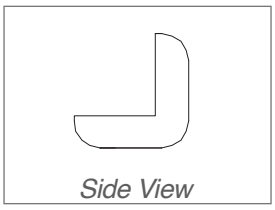

Item Code	Dimensions	Weight
OCM8	3/4H x 3/4D x 96L	0.7 LB

Traditional Light Rail

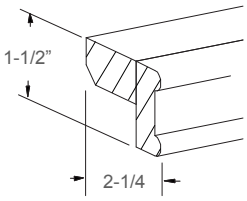

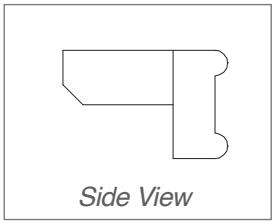

Item Code	Dimensions	Weight
TLR10-A	1-1/2H x 2-1/4D x 120L	5 LB

Traditional Light Rail

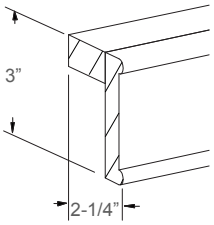

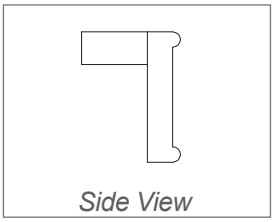

Item Code	Dimensions	Weight
* TLR10-3	3H x 2-1/4D x 120L	8 LB

Wide Beaded

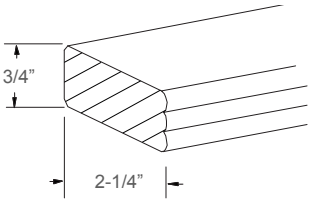

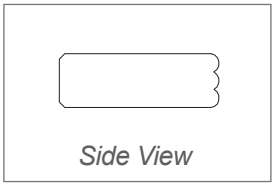

Item Code	Dimensions	Weight
* WPM10	3/4H x 2-1/4D x 120L	5 LB

PLEASE CALL FIRST All specifications are subject to change without notice. All images are for reference only. To ensure the highest satisfaction, we strongly recommend you view an actual sample for product style and construction.

Chair Rail

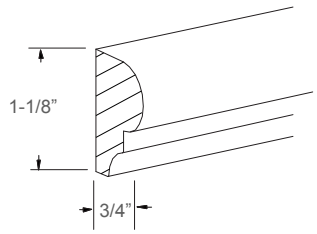

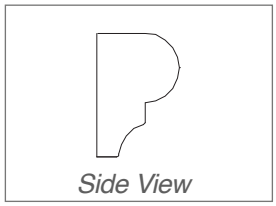

Item Code	Dimensions	Weight
CR10	1-1/8H x 3/4D x 120L	2 LB

Full Chair Rail

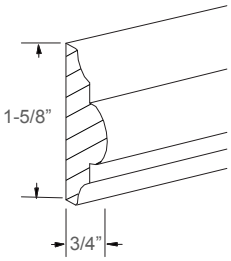

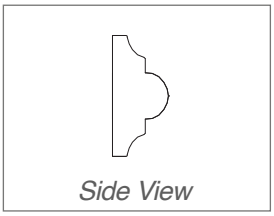

Item Code	Dimensions	Weight
FSM10	1-5/8H x 3/4D x 120L	2 LB

Scribe

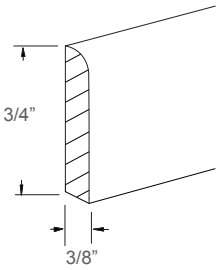

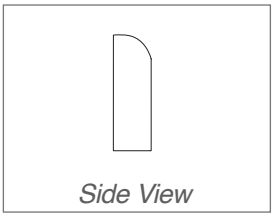

Item Code	Dimensions	Weight
SM8	3/4H x 3/8D x 96L	0.5 LB

Ogee

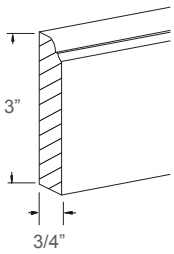

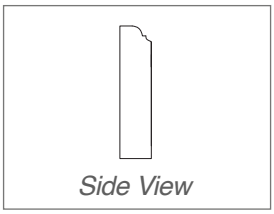

Item Code	Dimensions	Weight
OGM10	3H x 3/4D x 120L	6 LB

Wide Dentil

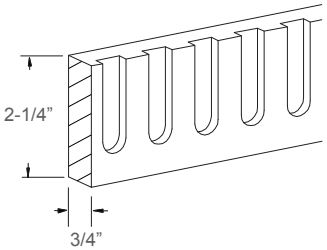

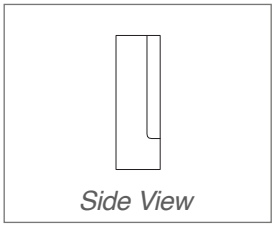

Item Code	Dimensions	Weight
WDM10	2-1/4H x 3/4D x 120L	4 LB

PLEASE CALL FIRST Availability for a particular product style and color may vary depending on locations.
Please check with your local *J&K Cabinetry* authorized wholesaler for current availability before planning your projects.

Cove

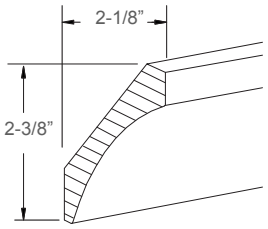

	Door style
Only available	S1, S5, S8, E1, E2

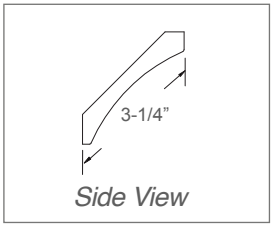

Item Code	Dimensions	Weight
ST10	2-3/8H x 2-1/8D x 120L	4 LB

Cove

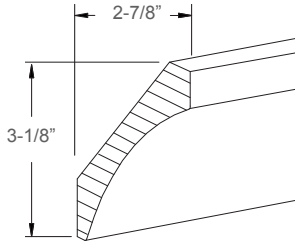

	Door style
Only available	S1, S5, S8, E1, E2

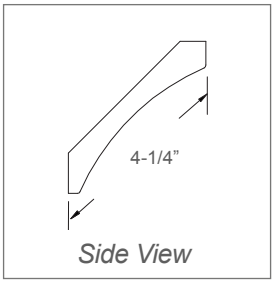

	Item Code	Dimensions	Weight
*	ST10-- 4-1/4	3-1/8H x 2-7/8D x 120L	6 LB

Large Cove

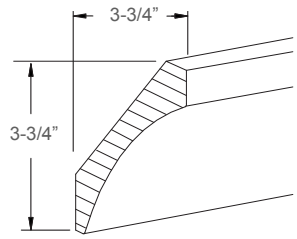

	Door style
Only available	S1, S5, S8

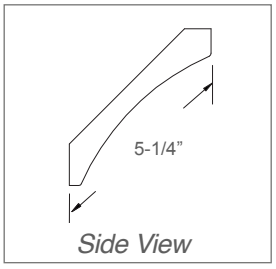

	Item Code	Dimensions	Weight
*	ST10-- 5-1/4	3-3/4H x 3-3/4D x 120L	4 LB

Cove with Base

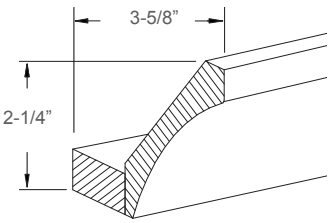

	Door style
Only available	S1, S5, S8, E1, E2

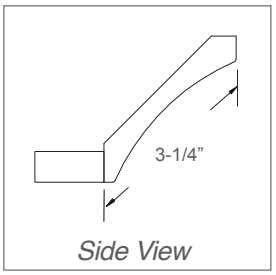

Item Code	Dimensions	Weight
AST10-- 3-1/4	2-1/4H x 3-5/8D x 120L	7 LB

PLEASE CALL FIRST All specifications are subject to change without notice. All images are for reference only. To ensure the highest satisfaction, we strongly recommend you view an actual sample for product style and construction.

Cove with Base

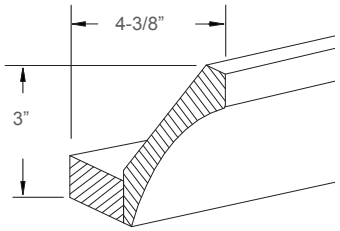

	Door style
Only available	S1, S5, S8, E1, E2

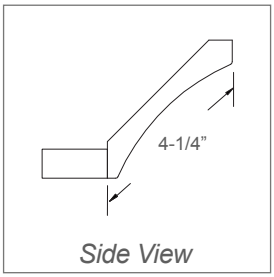

	Item Code	Dimensions	Weight
*	AST10-- 4-1/4	3H x 4-3/8D x 120L	8 LB

Large Cove With Base

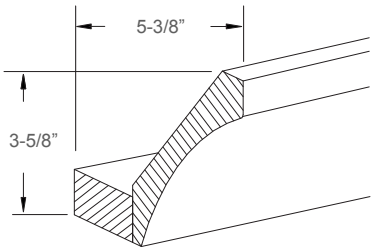

	Door style
Only available	S1, S5, S8

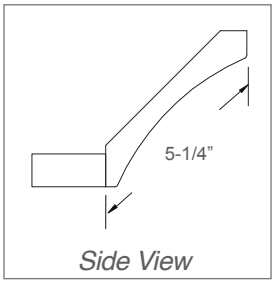

Item Code	Dimensions	Weight
AST10-- 5-1/4	3-5/8H x 5-3/8D x 120L	9 LB

Crown

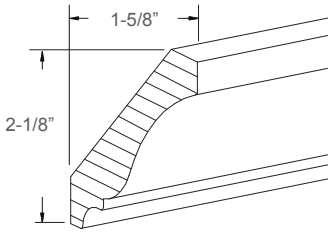

NOT Available For S1, S5, S8 : CM10

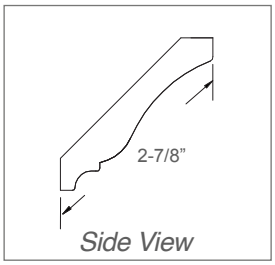

Item Code	Dimensions	Weight
CM10	2-1/8H x 1-5/8D x 120L	5 LB

Crown with Base

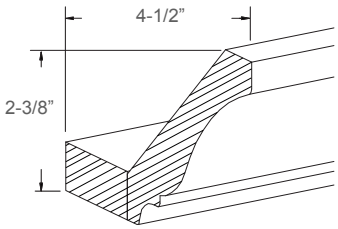

NOT Available For S1, S5, S8 : ACM10-- 3-1/4

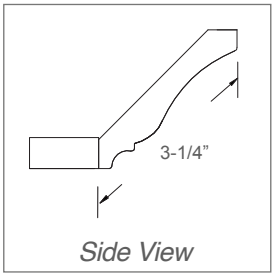

Item Code	Dimensions	Weight
ACM10-- 3-1/4	2-3/8H x 4-1/2D x 120L	8 LB

PLEASE CALL FIRST Availability for a particular product style and color may vary depending on locations.
Please check with your local *J&K Cabinetry* authorized wholesaler for current availability before planning your projects.

Large Crown with Base

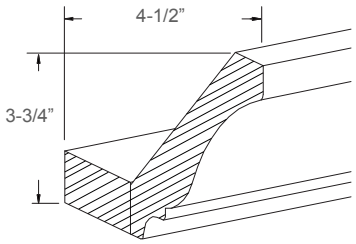

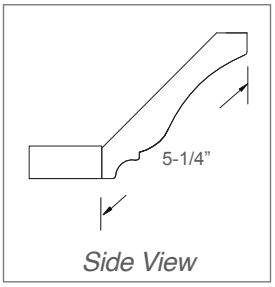

NOT Available For S1, S5, S8 : ACM10-- 5-1/4

Item Code	Dimensions	Weight
ACM10-- 5-1/4	3-3/4H x 4-1/2D x 120L	12 LB

Dentil Crown with Base

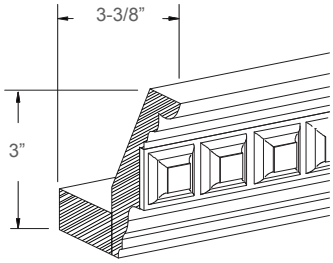

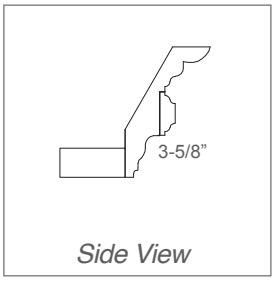

NOT Available For S1, S5, S8, H3, H8, H9 : CCM10-B

	Item Code	Dimensions	Weight
*	CCM10-B	3H x 3-3/8D x 120L	8 LB

Dentil Crown with Base

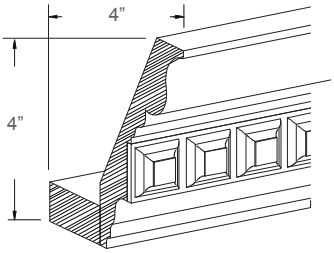

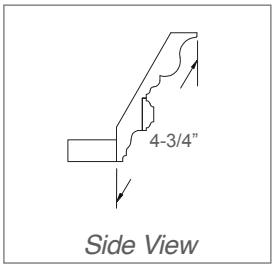

NOT Available For S1, S5, S8, H3, H8, H9 : CCM10-A

Item Code	Dimensions	Weight
CCM10-A	4H x 4D x 120L	10 LB

PLEASE CALL FIRST All specifications are subject to change without notice. All images are for reference only. To ensure the highest satisfaction, we strongly recommend you view an actual sample for product style and construction.

VALANCES & DECOR BLOCKS



Frieze Valance

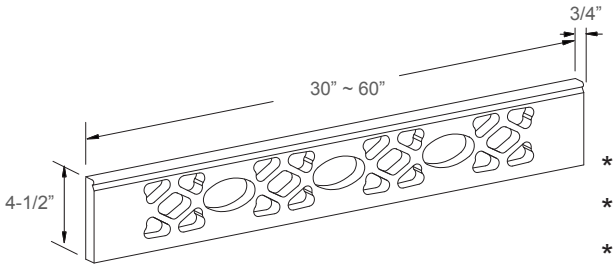

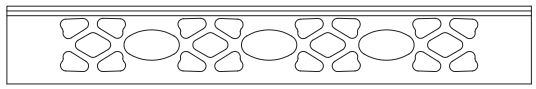

Front View

	Item Code	Dimensions	Weight
*	V30A	30W x 4-1/2H x 3/4D	2 LB
*	V33A	33W x 4-1/2H x 3/4D	2 LB
*	V36A	36W x 4-1/2H x 3/4D	2 LB
*	V42A	42W x 4-1/2H x 3/4D	3 LB
*	V48A	48W x 4-1/2H x 3/4D	3 LB
*	V54A	54W x 4-1/2H x 3/4D	3 LB
*	V60A	60W x 4-1/2H x 3/4D	3 LB

Arch Valance

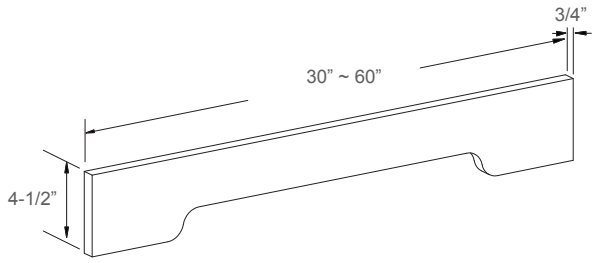



Front View

Item Code	Dimensions	Weight
V30B	30W x 4-1/2H x 3/4D	2 LB
V33B	33W x 4-1/2H x 3/4D	2 LB
V36B	36W x 4-1/2H x 3/4D	2 LB
V42B	42W x 4-1/2H x 3/4D	3 LB
V48B	48W x 4-1/2H x 3/4D	3 LB
V54B	54W x 4-1/2H x 3/4D	3 LB
V60B	60W x 4-1/2H x 3/4D	4 LB

Arch Valance

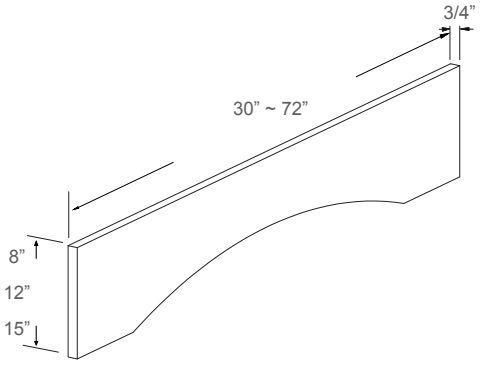

Notes: Valance Center 5" (RPV60 is 8-1/4")

	Item Code	Dimensions	Weight
*	RPV30	30W x 8H x 3/4D	4 LB
	RPV36	36W x 8H x 3/4D	5 LB
	RPV42	42W x 8H x 3/4D	6 LB
*	RPV48	48W x 8H x 3/4D	6 LB
	RPV54	54W x 8H x 3/4D	7 LB
*	RPV42-12	42W x 12H x 3/4D	8 LB
*	RPV60-15	60W x 15H x 3/4D	11 LB
*	RPV72-15	72W x 15H x 3/4D	15 LB

PLEASE CALL FIRST All specifications are subject to change without notice. All images are for reference only. To ensure the highest satisfaction, we strongly recommend you view an actual sample for product style and construction.

Arch Valance with Raised Panel

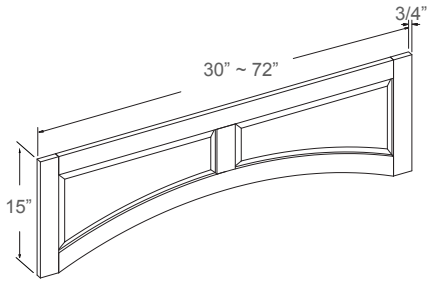

Notes: Arch Height: 4-1/2

	Item Code	Dimensions	Weight
*	RPV30-A	30W x 15H x 3/4D	6 LB
	RPV36-A	36W x 15H x 3/4D	7 LB
	RPV42-A	42W x 15H x 3/4D	8 LB
	RPV48-A	48W x 15H x 3/4D	9 LB
	RPV54-A	54W x 15H x 3/4D	10 LB
	RPV60-A	60W x 15H x 3/4D	11 LB
*	RPV72-A	72W x 15H x 3/4D	12 LB

Keystone

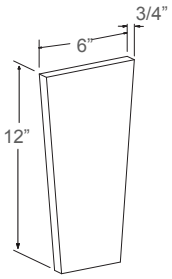

	Item Code	Dimensions	Weight
*	CO12	6W x 12H x 3/4D	1 LB

Fluted Filler

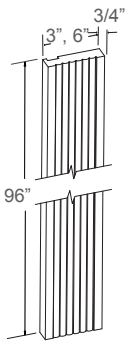

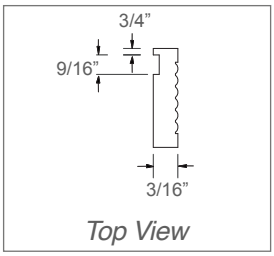

Top View

Item Code	Dimensions	Weight
PCVFF3	3W x 96H x 3/4D	4 LB

Plain Block

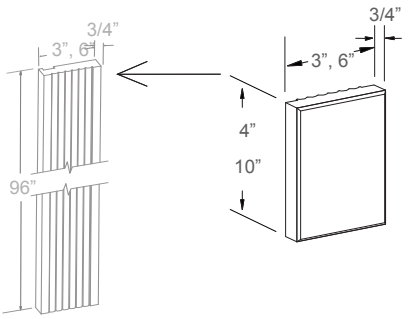

Item Code	Dimensions	Weight
BB3*4	3W x 4H x 3/4D	0.2 LB

Rosette Block

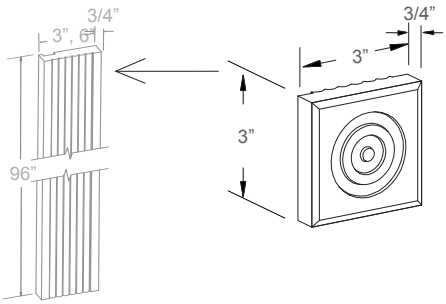

Item Code	Dimensions	Weight
FB3*3	3W x 3H x 3/4D	0.2 LB

PLEASE CALL FIRST Availability for a particular product style and color may vary depending on locations.
Please check with your local *J&K Cabinetry* authorized wholesaler for current availability before planning your projects.

ONLAYS, CORBELS & POSTS



Grape Ornament

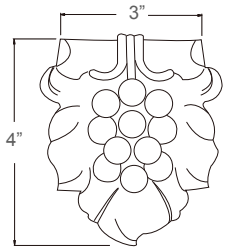

	Item Code	Dimensions	Weight
*	SGO	3W x 4H x 3/4D	0.1 LB

Leaf Ornament

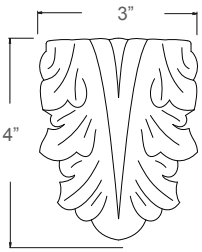

	Item Code	Dimensions	Weight
*	RGO	3W x 4H x 3/4D	0.1 LB

Round Ornament

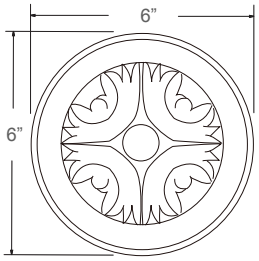

	Item Code	Dimensions	Weight
*	ASO	6W x 6H x 3/4D	0.6 LB

Leaf Corbel

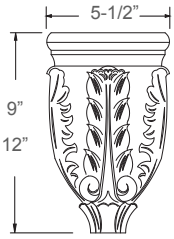

	Item Code	Dimensions	Weight
*	LC9	5-1/2W x 9H x 2-3/4D	2 LB
*	LC12	5-1/2W x 12H x 2-3/4D	2 LB

Shell Onlay



	Item Code	Dimensions	Weight
*	AC	18-1/2W x 3-1/2H x 1/2D	0.4 LB

Grape Onlay

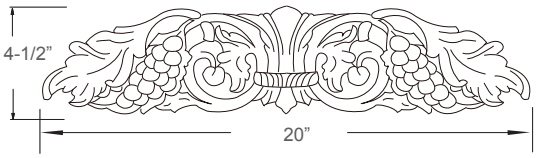

	Item Code	Dimensions	Weight
	GRPO	20W x 4-1/2H x 3/4D	1.2 LB

Large Leaf Onlay

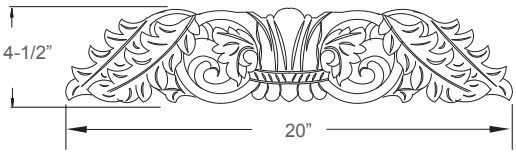

	Item Code	Dimensions	Weight
	RRPO	20W x 4-1/2H x 3/4D	1.2 LB

PLEASE CALL FIRST Availability for a particular product style and color may vary depending on locations.
Please check with your local *J&K Cabinetry* authorized wholesaler for current availability before planning your projects.

Mission Corbel

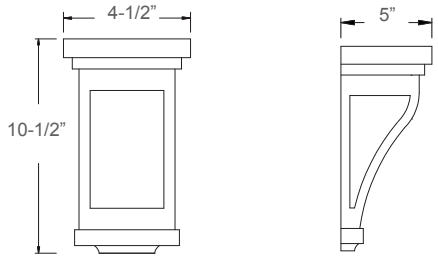

Item Code	Dimensions	Weight
SC58	4-1/2W x 10-1/2”H x 5D	3 LB

Large Mission Corbel

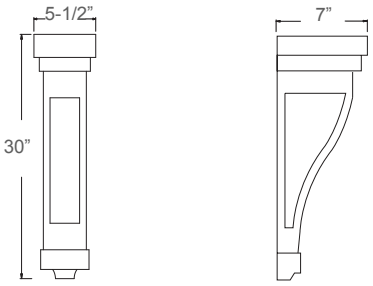

Item Code	Dimensions	Weight
* SC530	5-1/2W x 30H x 7D	13 LB

Grape Corbel

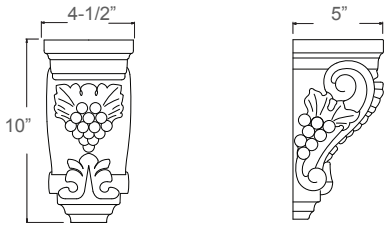

Item Code	Dimensions	Weight
GC58	4-1/2W x 10H x 5D	3 LB

Narrow Grape Corbel

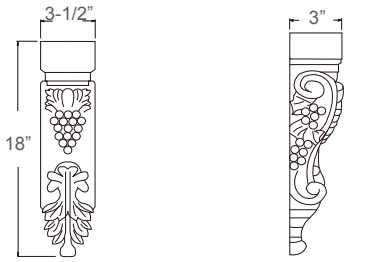

Item Code	Dimensions	Weight
OLC318	3-1/2W x 18H x 3D	1.4 LB

Acanthus Corbel

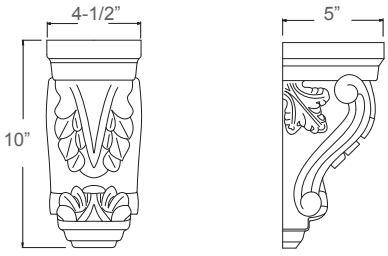

Item Code	Dimensions	Weight
RC58	4-1/2W x 10H x 5D	3 LB

Acanthus Corbel

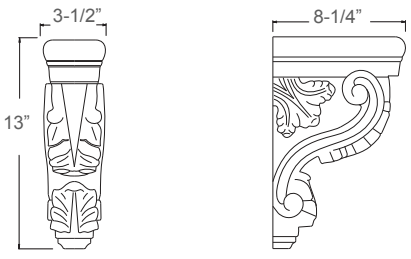

Item Code	Dimensions	Weight
RC313	3-1/2W x 13H x 8-1/4D	5 LB

PLEASE CALL FIRST All specifications are subject to change without notice. All images are for reference only. To ensure the highest satisfaction, we strongly recommend you view an actual sample for product style and construction.

Large Acanthus Corbel

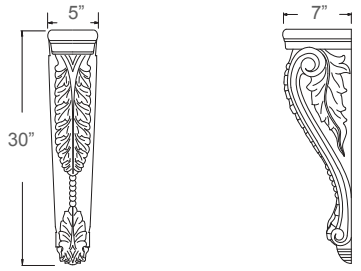

Item Code	Dimensions	Weight
RC530	5W x 30H x 7D	14 LB

Large Acanthus Corbel

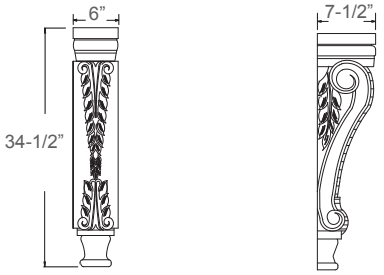

Item Code	Dimensions	Weight
CB34-1/2	6W x 34-1/2H x 7-1/2D	24 LB

Full Turn Post



Item Code	Dimensions	Weight
SP3X34-1/2	3W x 34-1/2H x 3D	5 LB

Twisted Full Turn Post

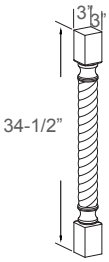

Item Code	Dimensions	Weight
RP34-1/2	3W x 34-1/2H x 3D	6 LB

Twisted Split Turn Post

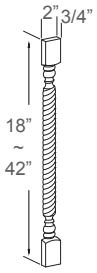

Item Code	Dimensions	Weight
RPS18	2W x 18H x 3/4D	0.6 LB
RPS24	2W x 24H x 3/4D	0.7 LB
RPS30	2W x 30H x 3/4D	0.9 LB
RPS36	2W x 36H x 3/4D	1.1 LB
RPS42	2W x 42H x 3/4D	1.2 LB

Tulip Foot

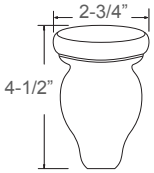

	Item Code	Dimensions	Weight
*	TF	2-3/4W x 4-1/2H x 2-3/4D	0.5 LB

PLEASE CALL FIRST Availability for a particular product style and color may vary depending on locations.
Please check with your local *J&K Cabinetry* authorized wholesaler for current availability before planning your projects.

WWW. JANDKCABINETRY.COM

Copyrights © 2023 J&K International Group, LLC. All Rights Reserved.