TRADE-WIND

VSL 400 SERIES
(18" MODELS)
RANGE HOOD LINERS

PERFORMANCE · QUALITY · CUSTOMER SERVICE

QUIET OPERATION

- Large 3-speed blower operates at lower RPM reducing the sound level

ENDURING QUALITY

- Commercial grade stainless steel (#304 grade) and galvanized steel construction
- LED lights brighten cooking area
- CFM and sound tested by Energy Systems Laboratory at Texas A&M University

DISTINCTIVE LOW-PROFILE DESIGN

- Style complements ALL custom and manufactured wood hood designs
- Simplicity of design preferred by homeowners

EASE OF OPERATION

- Remote control included with purchase
- Optional automatic 5 minute shut off timer
- Electronic touch controls with blue LED lighting

SIMPLE INSTALLATION

- Installs easily in standard size or custom-built wood range hoods
- Wiring diagram label for simple electrical connection

EASY CLEANING

- Dishwasher-safe commercial-style baffle filters with 2 easy-grip handles
- Detergent inlet holes and grease exit holes in baffle filters for superior dishwasher cleaning



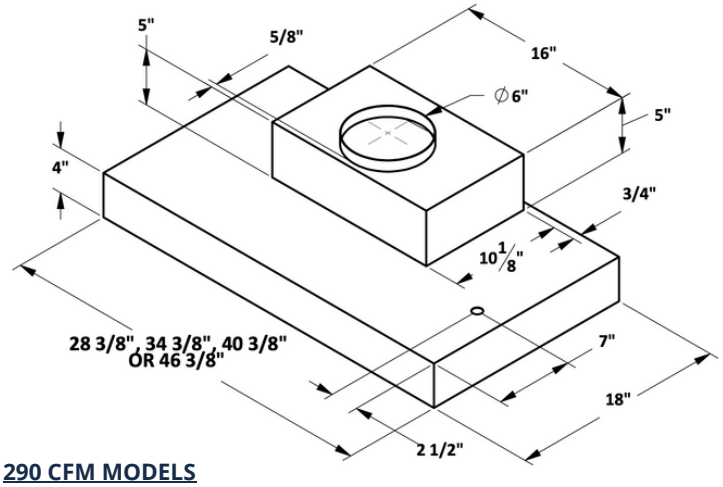

290 CFM MODELS

OPTIONAL DUCTLESS CONVERSION KIT MODEL#: 5BL-39-400-DCK; 5BL-39-400-DCK1 (VSL4482RC ONLY)



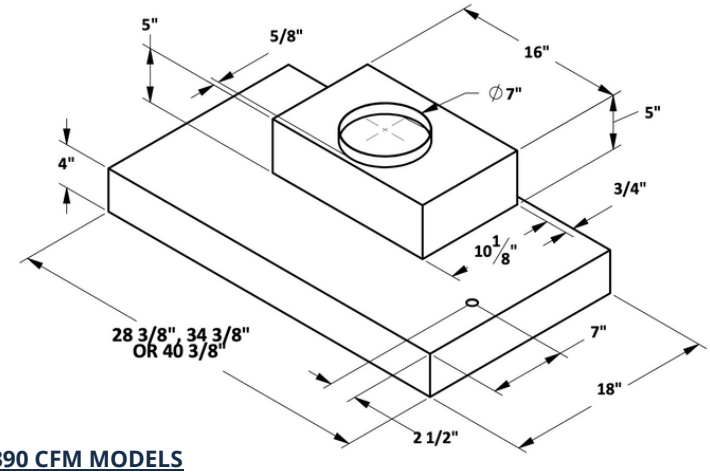

390 CFM MODELS

OPTIONAL DUCTLESS CONVERSION KIT MODEL#: 5BL-39-400-DCK

100% PERFORMANCE TESTED · 3-YEAR PARTS & LABOR WARRANTY ON EVERY TRADE-WIND® PRODUCT

TRADE-WIND

VSL 400 SERIES (18" MODELS)
RANGE HOOD LINERS

MODEL	FRONT TO BACK	WIDTH	COLOR	3-SPEED INTERNAL BLOWER	CFM	LED LIGHTS	S/S BAFFLE FLITERS	REMOTE CONTROL	DUCT COLLAR	ELECTRONIC TOUCH CONTROL
VSL4302RC	18"	28 ⅜"	S/S	√	290	2	√	√	6"	√
VSL4303RC	18"	28 ⅜"	S/S	√	390	2	√	√	7"	√
VSL4304RC	18"	28 ⅜"	S/S	√	390	2	√	√	3 ¼" x 10"	√
VSL4306RC	18"	28 ⅜"	S/S	√	600	2	√	√	8"	√
VSL4362RC	18"	34 ⅜"	S/S	√	290	2	√	√	6"	√
VSL4363RC	18"	34 ⅜"	S/S	√	390	2	√	√	7"	√
VSL4364RC	18"	34 ⅜"	S/S	√	390	2	√	√	3 ¼" x 10"	√
VSL4366RC	18"	34 ⅜"	S/S	√	600	2	√	√	8"	√
VSL4422RC	18"	40 ⅜"	S/S	√	290	2	√	√	6"	√
VSL4423RC	18"	40 ⅜"	S/S	√	390	2	√	√	7"	√
VSL4424RC	18"	40 ⅜"	S/S	√	390	2	√	√	3 ¼" x 10"	√
VSL4426RC	18"	40 ⅜"	S/S	√	600	2	√	√	8"	√
VSL44212RC	18"	40 ⅜"	S/S	√	1200	2	√	√	10"	√
VSL4482RC/3RC	18"	46 ⅜"	S/S	√	290	3	√	√	6"	√
VSL4486RC	18"	46 ⅜"	S/S	√	600	3	√	√	8"	√
VSL44812RC	18"	46 ⅜"	S/S	√	1200	3	√	√	10"	√
VSL45412RC	18"	52 ⅜"	S/S	√	1200	3	√	√	10"	√
VSL46012RC	18"	58 ⅜"	S/S	√	1200	3	√	√	10"	√
VSL47212RC	18"	70 ⅜"	S/S	√	1200	4	√	√	10"	√

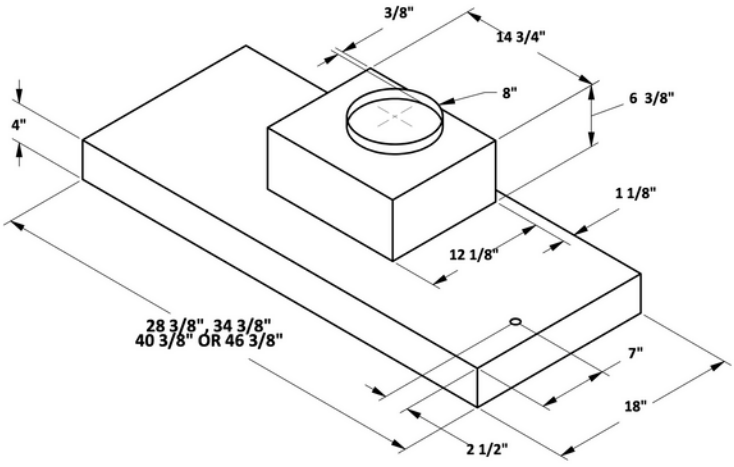

600 CFM MODELS

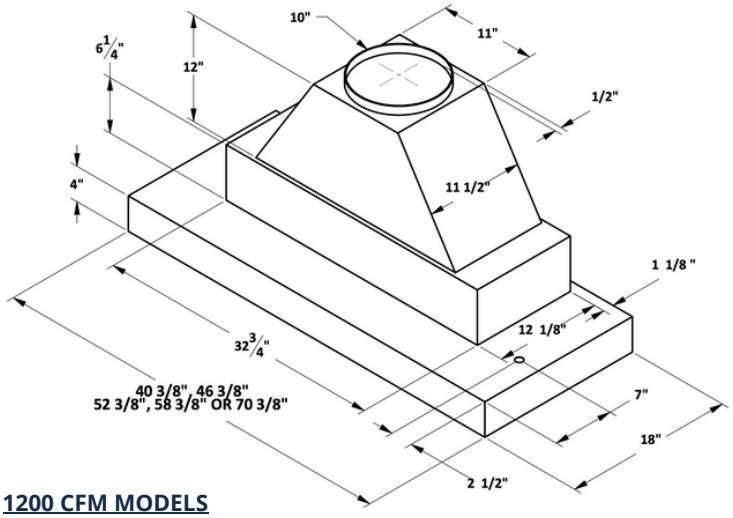

1200 CFM MODELS

800 WEST GRANT STREET
PHOENIX, AZ 85007
1-800-955-5737
602-900-8500
T-WUSA.COM

MADE IN PHOENIX, AZ USA

PROVERBS 22:29

TRADE-WIND Manufacturing, LLC has a policy of continuous improvements and reserves the right to modify (at any time without notice) any or all of its products, features, designs, components and specifications. For further information on installation and wiring, see the installation instructions included with the product or visit us on the web.

© 2023 TRADE-WIND MANUFACTURING, LLC

For more information, please contact your dealer or your TRADE-WIND® representative.